SECTION III

INSTRUMENTATION AND AVIONICS

CONTENTS

(Continued Next Page)

CONTENTS (Continued)

INSTRUMENTATION

The Citation X is equipped with PRIMUS 2000 Digital Automatic Flight Control System (AFCS). The PRIMUS 2000 is a digital flight control and guidance system which is an automatic flight guidance, flight management, and electronic display system. It combines the electronic flight instrument system (EFIS), flight director, autopilot/yaw damper system, the LASEREF IV Inertial Reference System (IRS) and the flight management system into an integrated whole. The complete indicating system is comprised of five cathode ray tubes (CRTs). The pilot's and copilot's flight instruments and flight directors are displayed, respectively, on the left and right tubes of the dual electronic flight instrument system; the electronic attitude director indicator (EADI) and the electronic horizontal situation indicator (EHSI) are displayed on a single DU-870 display unit (DU), which is referred to as a primary flight display (PFD). Each pilot also has a multifunction display (MFD), where optional and backup displays are selectable, as well as the PFD. The central cathode ray tube (CRT) serves as the engine indicating and crew alerting system (EICAS) display. All of the CRTs are interchangeable, the bottom (control) sections being removable. A traffic alert and collision avoidance system (TCAS) works in conjunction with the mode S transponder and the flight guidance system. Operation of the flight directors is discussed in the Avionics section under Flight Guidance, and operation of the various systems is discussed under their separate headings in the separate Instruments and Avionics sections, as applicable. A combined standby airspeed indicator/altimeter, a standby attitude indicator (ADI), and a standby horizontal situation indicator (HSI) are installed to provide instrumentation in the unlikely event of complete failure of the dual EFIS system. Two independent pitot-static systems, left and right, measure total pressure and static pressure for the pilot's and copilot's electronic instruments. A third, separate, system provides pitot and static pressure to the standby altimeter/airspeed indicator. The three pitot tubes and six static ports are electrically heated for ice protection.

PITOT-STATIC SYSTEM

The left and right pitot tubes provide pitot pressure to their respective pilot's and copilot's digital air data computers (ADCs). They are symmetrically located on the nose of the airplane. The standby pitot tube, which provides pitot pressure for the standby airspeed indicator, is located below the copilot's side window. Three static ports are located on each side of the airplane. One port on each side provides static pressure for the pilot's air data computer, and another set of ports provides static pressure for the copilot's air data computer. The third set of ports provides static pressure to the standby airspeed indicator/altimeter. All three static ports on each side are located in one static port plate assembly. The pilot's static system used the top static port on the left side and the bottom static port on the right side, and the copilot's system uses the reverse combination. The standby system uses the aft static port in both static port plate assemblies. The static port plate assemblies are located below the pilot's and copilot's windows.

The air data computers (ADCs) receive the pneumatic information, and in turn convert it to electrical data, each providing electrical signals for operation of the PFD displays of its respective system Mach/airspeed indicator, altimeter, and instantaneous vertical speed indicator. Both ADCs also provide altitude outputs for the two mode S transponders. The standby airspeed indicator/altimeter is powered only by static and impact pressure; the only electrical function in the system is the standby altimeter vibrator, which receives power from the standby instrument bus. If the ADCs should fail, red Xs will appear at the respective displays of airspeed and altitude, and the analog scales and digital values will disappear. On the vertical speed display, the pointer will disappear and the digital readout will be dashed out.

PITOT-STATIC SYSTEM

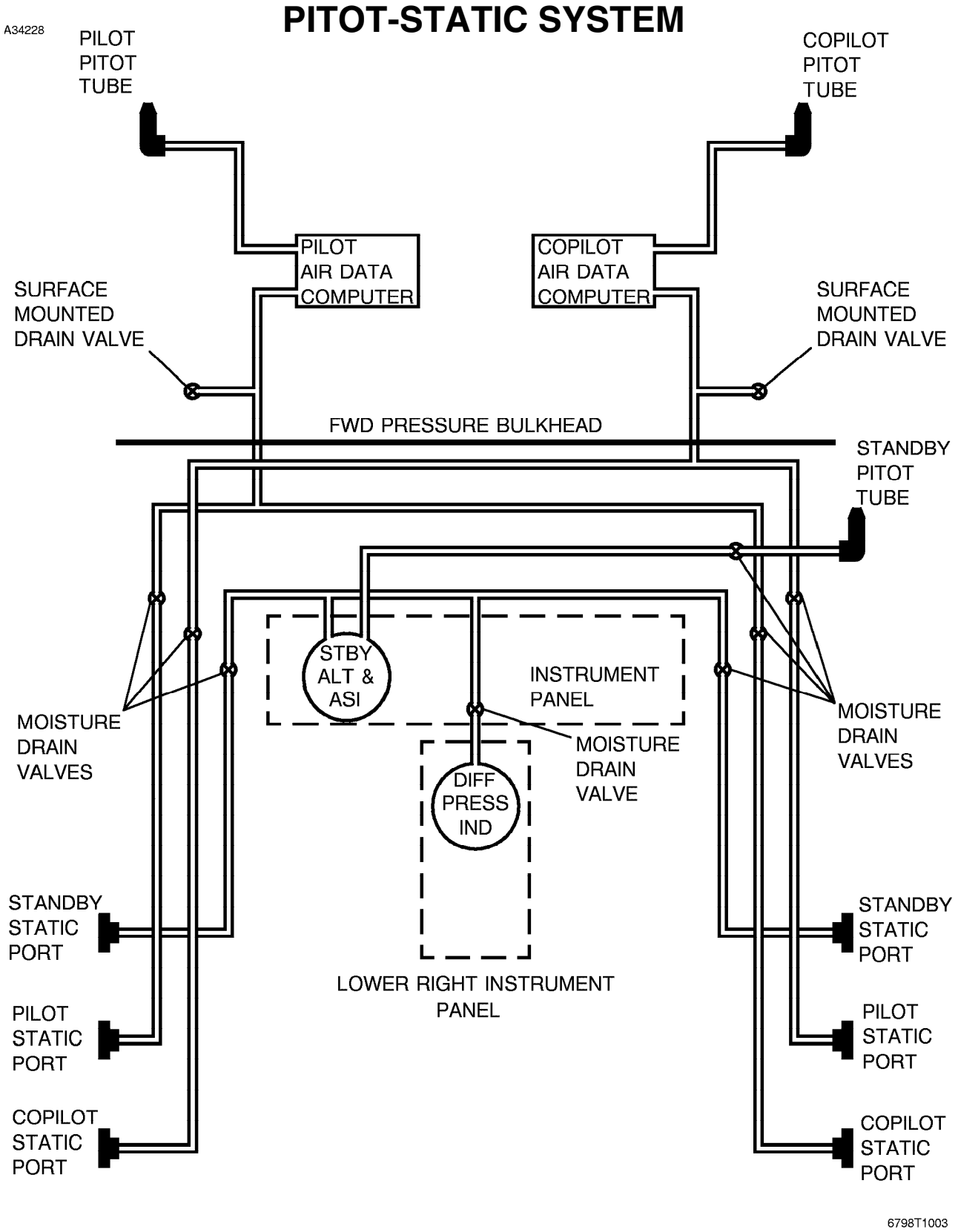

Figure 3-1

ALTITUDE DISPLAY

Both altimeters are electrically driven altitude displays which are part of the primary flight display (PFD). They receive their data from their respective digital air data computers, which convert pneumatic information into electronic signals and transmit it to the primary flight displays (PFDs). The altimeter display is located in the upper right side of the (PFD). There are two altitude displays superimposed upon each other. One display is a moving analog scale with a fixed pointer. The scale and its markings are white. The larger digits descend from the top of the scale. The other display is a rolling digital display which is located in the center of the analog tape display (the analog reference line); it gives the actual value in the display read-out window and is a magnified display of the numbers on the tape at that position. This display magnifies the digits on the scale and is readable to a 20-foot resolution. The digits within the window are white. For climb or descent rates greater than 3000 feet per minute the rolling drum digits are replaced with two dashes in order to facilitate reading of the analog scale. Below 10,000 feet, a boxed cross-hatch replaces the 10,000's digits to emphasize low altitude awareness.

A magenta altitude trend vector originates at the altitude reference line. It is a thermometer shape that corresponds to the altitude rate-of-change. It moves along the left side of the altitude tape and predicts the actual airplane altitude in six seconds if the same vertical speed is maintained. Altitude rate is output from the micro air data computer (MADC).

An altitude alert select readout is located at the top of the altitude tape depiction. It is selectable by the copilot using the right-side instrument remote controller. When the airplane is within the altitude alert operating region the digits are boxed. The set data is cyan under normal circumstances. When departing a selected altitude, the select display and the box will turn amber. An altitude select bug, a notched rectangle, travels along the left side of the altitude tape. It appears on the tape across from the altitude set into the altitude alert select display. The bug color is the same as the digit color in the altitude select window. If the bug is moved off the current scale range, half of the bug remains on the scale to indicate the direction to the set bug.

At radio altitudes of 550 feet or less, the lower part of the altitude tape changes linearly from a gray raster to brown. At zero radio altitude, the brown raster touches the altimeter reference line.

The selection of metric (hectopascals, [HP]) or inches-of-mercury (inHg) barometric altimeter settings is controlled by a push-on/push-off button (BARO/IN HPA) on the bezel of the respective MFD. A BARO set knob on the bottom of the PFD controls the altimeter pressure setting. By pressing the button next to the BARO knob (STD), the standard datum plane (29.92) may be selected on the electronic Kollsman dial. The baro set data is always cyan. A metric altitude display is displayed directly below the baro set data. It will appear only if metric data has been selected for display with the MFD bezel control. When selected the altitude scale still displays altitude in feet. The display is always green.

A minimum descent altitude or decision height (MDA or DH) select bug, which corresponds with the digital set value, is displayed on the left side of the altitude tape. A line extends from the bug across the tape; below the line appears the brown low altitude awareness color. The bug and the digital MDA settings are accomplished by turning the knob on the lower left of the PFD bezel.

Other information which interfaces with the altimeter, but pertains more directly to flight guidance, will be covered in detail under Flight Guidance in this section.

ALTITUDE DISPLAY

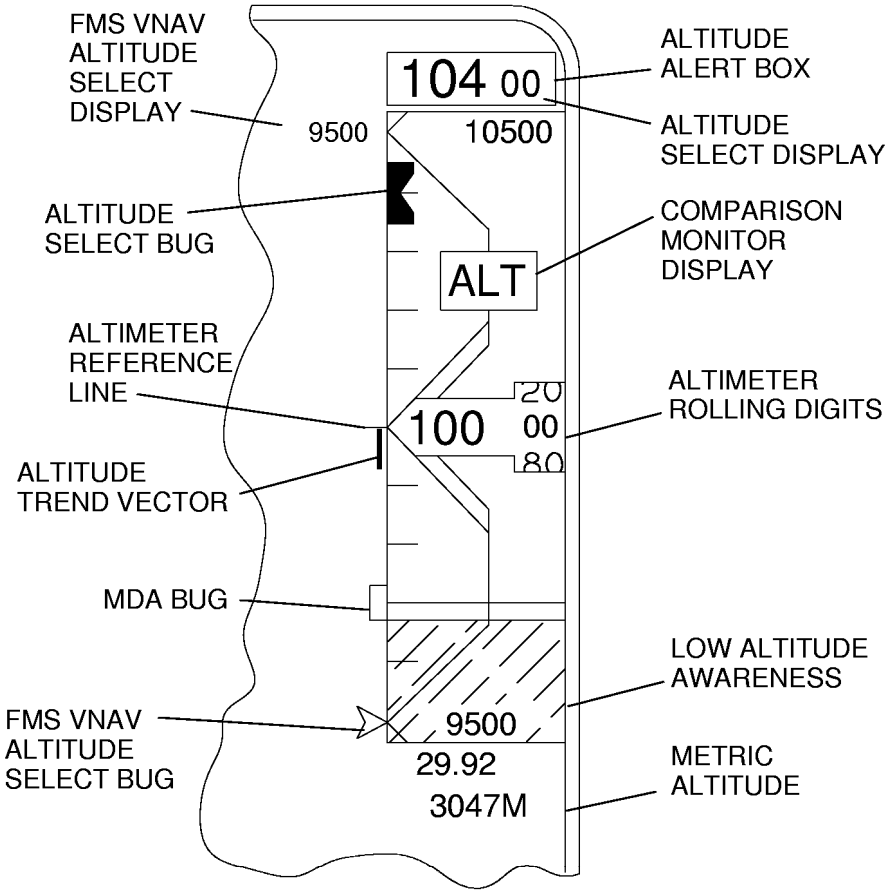

Figure 3-2

An altitude annunciation warning (ALT) will appear in the upper part of the altitude tape if the comparison monitor system senses a difference of a predetermined value in the altitude information provided by the micro air data computers.

The radio altimeter and its displays are covered under Radio Altimeter in this section.

MACH/AIRSPEED DISPLAY

In the Citation X the airspeed indicators are replaced by electronic tape airspeed displays which are a part of the primary flight displays (PFDs). The airspeed display occupies the upper left corner of the PFD, and is color coded to make interpretation of the data easier. The Mach display is digital and is located immediately below the airspeed tape.

The airspeed (analog) display is a moving scale display with a fixed pointer and calibrated airspeed marks. The scale markings on the tape are white and in 10-knot increments. The scale digits move so the larger numbers descend from the top of the display. The center of the airspeed display, which is also the analog reference line, is where the current airspeed is indicated; it is a rolling digit display, the higher numbers progressing down from the top. The rolling digit display is readable to 1-knot resolution. The digits within the pointer are white. If V_{MO}/M_{MO} is exceeded, the numbers in the center display turn red. When the airspeed trend vector exceeds V_{MO} by one knot, the rolling digits turn amber unless a red indication is called for.

AIRSPEED DISPLAY

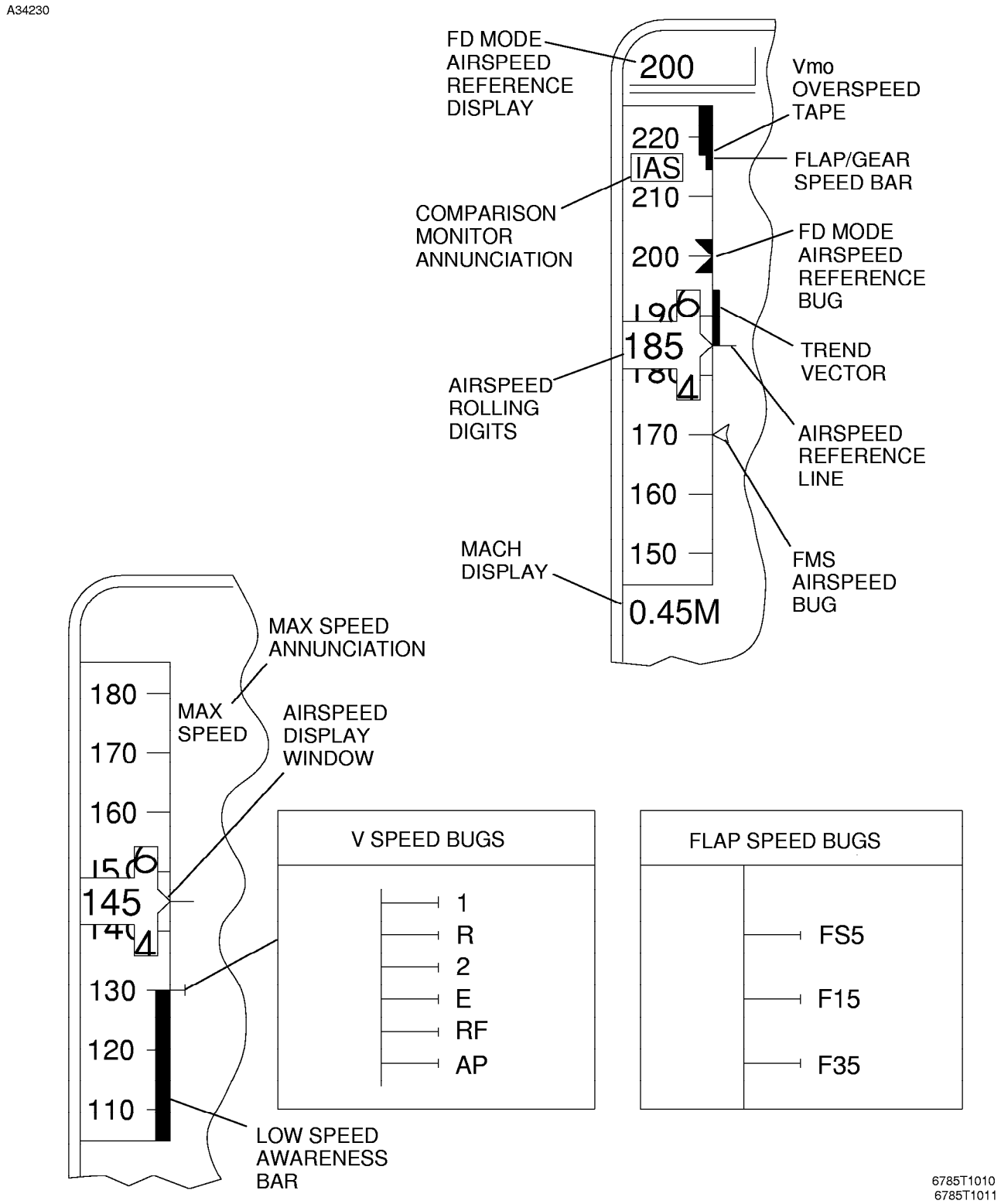

Figure 3-3

A V_{MO} overspeed tape, a red bar, is located at the upper right side of the display. It is a fixed bar that originates at A V_{MO} and extends to the end of the scale. The V_{MO} bar will not appear until the speed which corresponds to it appears on the scale.

An airspeed trend vector is positioned along the outer right side of the airspeed tape. It is referenced to the airspeed reference line. The vector indicates what the value of indicated airspeed is projected to be in ten seconds, if the present trend is maintained.

A digital display of the current Mach is shown directly below the airspeed tape. The value is displayed when Mach passes 0.45 accelerating and is removed when it passes below 0.40 on deceleration. The digits are colored in agreement with the digital airspeed display.

A low speed awareness bar, which works in conjunction with the angle-of-attack (AOA) system, is located inside the lower right corner of the airspeed tape. It is a thermometer type annunciator which has three segments: white, yellow, and red. The white color represents an angle-of-attack of 1.2 to 1.3; yellow represents 1.1 to 1.2; red represents less than 1.1 to stall speed. The angle-of-attack indication is referenced to the airspeed reference line; when the red portion of the bar reaches the airspeed reference line, the AOA driven display indicates that the stickshaker has activated and an approach to stall has been reached. The display does not appear when the airplane is on the ground.

A flight director airspeed/Mach reference bug display is shown only when the flight director flight level change (FLC) mode is engaged. The pilot-adjustable airspeed or Mach reference digital read-out is displayed directly above the airspeed tape. The airspeed/Mach reference bug is shown on the right side of the airspeed tape. Both the read-out and the bug are cyan.

When the active flight guidance system has entered the MAX SPEED mode, an amber MAX SPD is annunciated to the right of the upper part of the airspeed tape (refer to Flight Guidance in this section).

There are six V_{SPEED} bugs, corresponding to various phases of flight, which can be set for display on the primary flight displays (PFDs). These values are input using the multifunction display (MFD) V SPEEDS menu. The blue colored V_{SPEEDS} travel along the right side of the tape. V_1 and V_R can be set equal to each other. All other V_{SPEED} bugs have a minimum required difference of 3 knots. After the speed corresponding to the set V_{SPEED} is reached $\pm$50 knots the bugs are removed from the display. The V_{REF} bug is removed only after the airspeed equals V_{REF} minus 50 knots. The enroute climb speed (V_{ENR}) is set at 190 knots.

V_{SPEED}	LABEL	DEFINITION
V_1	1	T/O Decision Speed
V_R	R	Rotation Speed
V_2	2	T/O Safety Speed
V_{ENR}	E	Enroute Cl (190KTS)
V_{APP}	APP	Approach Ref.
V_{REF}	REF	Landing Ref.

When the V_{SPEED} values are being set, and with the Mach below 0.45, the V_{SPEED} bug values sequentially replace the MACH display window until the V_{SPEED} bug is displayed on the analog airspeed scale. When on the ground, if all the T/O V_{SPEED} values have not been set and selected for display, an amber VSPD annunciation is displayed in the window.

When the airplane is on the ground and the indicated airspeed is less than thirty knots, the bottom half of the airspeed tape is replaced with the V_{SPEEDS} and their values in a column, top to bottom, as follows: E, R, 2, 1.

A flap/gear speed bar is located on the right side of the airspeed tape. It is a thermometer type of annunciation which extends from the V_{MO} overspeed tape to the airspeed limit for the airplane's configuration as defined below:

CONFIGURATION	SPEED LIMIT
Flaps 5°	250 Knots
Flaps 15°	210 Knots
Flaps > 15°	180 Knots
Gear Down	210 Knots

VERTICAL SPEED DISPLAY

Like the airspeed and altitude displays, the vertical speed display forms a portion of the flight instrument display on the pilot's and copilot's primary flight displays (PFDs). The vertical speed display is located in the lower right side of the PFDs. It is depicted as a fixed arc scale with a moving pointer, much like a conventional vertical speed would appear. There is a also digital readout, as well as the conventional analog readout. The analog scale on the display is in white and ranges from a maximum rate of +3500 feet to -3500 feet, calibrated in thousands of feet. The scale is somewhat expanded between the +1000 to -1000 feet markings. The digital reading of the actual vertical speed is displayed as white digits in a box on the zero reference line. The digital readout has a resolution of fifty feet per minute below ±1000 feet per minute. The maximum displayable value is 9999 feet per minute. For values between ±1000 feet per minute, a + or - sign is displayed in the box to indicate climb or descent. For values less than ±500 feet per minute, the digital display shows the actual vertical speed value.

For vertical speeds greater than 3500 feet per minute, the pointer is positioned applicably at the top or bottom of the scale. The digital display shows the actual vertical speed.

When a vertical speed mode is engaged, the vertical speed target bug will be displayed. It moves along the left side of the vertical speed scale. The bug operates with the flight director and will line up with the value on the vertical speed scale that is set with the GC-810 flight guidance controller. A digital readout is also displayed on top of the vertical speed scale, along with an up/down arrow to show direction.

When a vertical mode is selected on the flight management system (FMS) the digital readout and bug will also be displayed, the target information coming from VPATH.

If the FMS is selected as the vertical speed target source the bug and target display will be in magenta color; if the flight guidance system is selected the displays will be in cyan.

If the Honeywell TCAS II is installed, annunciations giving directions for traffic avoidance are presented on the vertical speed display. For these indications and other information pertaining to TCAS II, refer to Traffic and Collision Avoidance System (TCAS) in this section.

VERTICAL SPEED DISPLAY

A34231

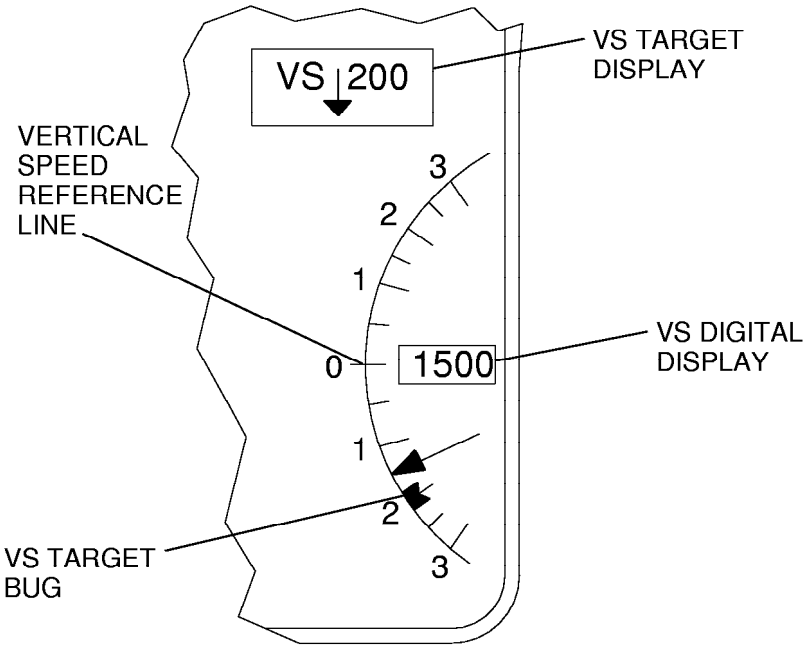

6785T1007

Figure 3-4

STANDBY AIRSPEED INDICATOR/ALTIMETER

A combination standby airspeed indicator/altimeter is mounted on the instrument panel above the pilot's multifunction display (MFD). The instrument has its own electrically heated pitot-static source and requires no other electrical power other than that which operates the altimeter vibrator, which is supplied from the emergency DC bus. An airspeed limit placard is located above the standby indicator.

STANDBY AIRSPEED INDICATOR/ALTIMETER

A5293

6718P1234

Figure 3-5

STANDBY ATTITUDE INDICATOR (ADI)

The standby attitude indicator (ADI) system consists of a gyro horizon and an emergency power supply provided by a lead-acid battery pack. The emergency power supply is mounted in left side of the nose avionics compartment. The gyro horizon, mounted high on the pilot's instrument panel above the multifunction display (MFD), is powered directly from the emergency power supply. In the event of a loss of airplane electrical power, the gyro horizon will continue to operate for the life of the emergency power supply batteries. A fully charged battery pack will provide thirty minutes of operating time. A green annunciator light, next to the STBY GYRO switch, will illuminate when the switch is held in the momentary TEST position, indicating that the batteries are in good condition. An amber annunciator will illuminate whenever the gyro system is on, and the airplane electrical power is not charging the emergency power supply batteries. In normal operation, the emergency power supply batteries are maintained at full charge by power from the the standby instrument bus.

STANDBY ATTITUDE INDICATOR

A5294

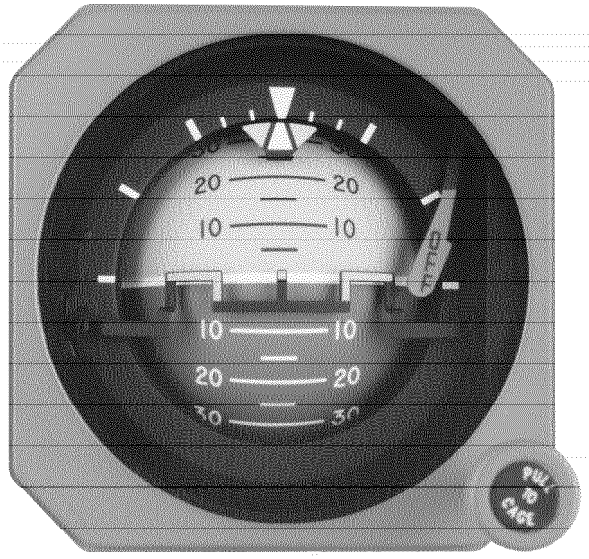

6785P1018

Figure 3-6

The system may also be tested by a TEST switch on the battery pack in the nose compartment; a green light will illuminate to indicate proper operation and adequate state of charge. Three amber lights on the battery pack indicate that the system is charging properly when power is on the airplane. A red light on the battery pack indicates that the batteries have attained a temperature of 55°C (130°F) or higher.

STANDBY HORIZONTAL SITUATION INDICATOR (HSI)

A standby horizontal situation indicator, (HSI) is mounted above the engine indicating and crew alerting system (EICAS) display unit, immediately to the right of the standby attitude indicator. The standby HSI is a conventional mechanical HSI which has a control knob (CRS) on the lower left bezel, for selecting desired HSI course information on the course cursor. Once set, the course cursor rotates with the compass card. The course deviation bar, which forms the inner segment of the course cursor, rotates with the cursor and moves laterally in the HSI in relation to the course cursor. An ILS glide slope indicator is located at the right side of the instrument.

The HSI displays compass heading, glide slope and localizer deviation, and airplane position relative to VOR radials. The compass card is graduated in 5-degree increments and a lubber line is fixed at the fore and aft positions. Azimuth markings are fixed at 45, 90, 135, 225, and 315 degrees of the compass face. A fixed reference airplane is in the center of the HSI, aligned longitudinally with the lubber line markings. Course deviation dots in the HSI act as a displacement reference for the course deviation bar. When tracking a VOR, the outer dot represents ten degrees, while on an ILS localizer it represents 2½ degrees. White TO-FROM arrows, in the center of the instrument, point to or from a station along the VOR radial when operating on a VOR. A red NAV flag comes into view when power is OFF, when NAV or localizer information is unreliable, or when signals from the NAV receiver are not valid. A red VERT flag will appear when the ILS glide slope signal is invalid or power to the glideslope indicator is lost. The standby HSI can display only NAV 1 information.

STANDBY HORIZONTAL SITUATION INDICATOR

A5295

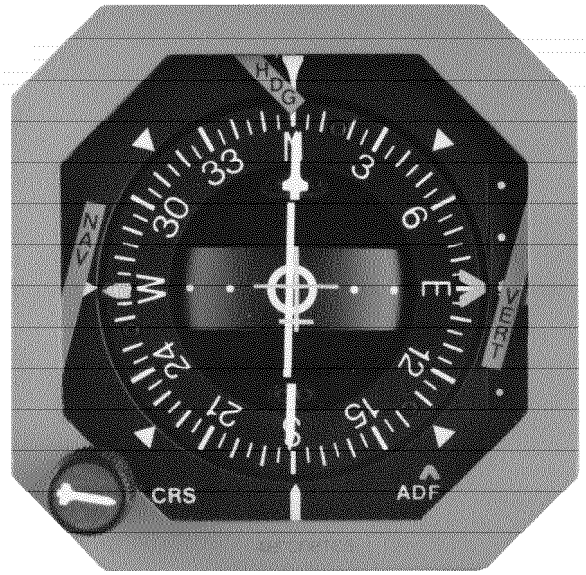

6785P1017

Figure 3-7

A red heading (HDG) flag will appear in the instrument when the power to the instrument is OFF or the instrument has failed.

MAGNETIC COMPASS

A standard liquid filled magnetic compass is mounted above the glare shield.

FLIGHT HOUR METER

The meter, located above the auxiliary power unit (APU) control panel, just forward of the right circuit breaker panel, displays the total flight time on the airplane in hours and tenths. Either landing gear squat switch activates the meter when the weight is off the gear and the airspeed indicates over 50 knots. The meter receives power from a 3-ampere circuit breaker (FLT HR METER) on the right circuit breaker panel. A small indicator on the face of the instrument rotates when the hour meter is in operation.

STANDBY ENGINE INSTRUMENTS

The standby engine instrument indicator is installed near the center of the instrument panel, above the Engine Indicating and Crew Alerting System (EICAS) display unit. The indicator has six liquid crystal displays, three for each engine. Each engine has an N_1 (fan) RPM, an N_2 (turbine) RPM, and an ITT (inter-turbine temperature) indicator. The displays are operational at all times when power is on the airplane; their primary function is to display engine power settings in RPM and ITT if power is lost to the EICAS system, or in case of a complete electrical failure. The standby engine instruments are powered through a five-ampere circuit breaker located on the left circuit breaker panel. Instrument power is received from the standby instrument bus, which in turn is powered by the emergency DC bus; power is therefore available from the airplane battery to power the instrument in an emergency.

The standby engine instrument indicator is a dual redundant system, therefore, if one FADEC (full authority digital engine control) should become unreliable, a second FADEC can provide information signals to the common serial bus and to the indicator. On initial power up, the standby engine instrument indicator displays all eights (8s) and will flash the digits for approximately three seconds, indicating the built in test is operational. If the standby engine instrument indicator displays all dashes, the information on the ARINC-429 serial bus data line is not valid or the signal has been lost.

STALL WARNING AND ANGLE-OF-ATTACK SYSTEM

The angle-of-attack (AOA) system is powered by 28 volts direct current (DC) from the left and right main DC busses and incorporates transmitters, probes, flap, slat, and speed brake position sensors, and indexers. The AOA system uses inputs from the angle-of-attack probes, the flaps, slats, and speedbrakes to compute a “normalized” angle-of-attack. The system is redundant in that the left and right systems are separate systems with separate computers and separate power sources. Power is provided from the left and right DC feed busses, respectively, through five-ampere circuit breakers on the left circuit breaker panel.

The angle-of-attack transmitters, one on each side of the airplane, are the basic sensors which detect the direction of airflow at the sides of the fuselage. Each transmitter has a conical slotted probe extending into the airstream. The probes rotate to achieve uniform airflow by nulling the pressure differential between upper and lower slots in their forward surfaces. The probe's angular position is converted to an electrical signal by a rotary variable differential transformer, which sends it to the AOA computer. An optional AOA indicator may be located on the far left side of the pilot's instrument panel.

The probes are heated for anti-icing, along with the pitot tubes and static ports. Each transducer/probe contains a case heater and a probe heater. The case heater is on when the applicable AOA HEATER circuit breaker is engaged; the probe heater is on when the applicable AOA HEATER circuit breaker is engaged and the pitot-static anti-ice switches are ON.

The flap, slat, and speed brake position sensors provide signals to the computers so that they are able to compensate for any flap, slat, or speed brake position. The computers calculate angle-of-attack from the transmitter signals and use signals from sensors in the systems for the flaps, slats, and speed brakes to compute normalized angle-of-attack. They compensate for all configurations and weights, providing data for the operation of the stall warning system, the low airspeed awareness indications on the EADIs and the optional indexer, and to present a standard readout on the angle-of-attack indicator. The computers also extend the slats, if they sense an impending stall.

Only the left computer information is displayed on the AOA indicator and indexer.

Two stick shakers are installed approximately 9 inches down from each control wheel, on the front side of the control column. When the angle-of-attack system senses an impending stall, the stick shakers are activated as a tactile warning to the pilot. Signals to each stick shaker are independently provided by the respective left and right angle-of-attack computers.

The optional angle-of-attack indicator provided on the Model 750 is a full range indicator. It is calibrated from 0 to 1.0 and marked with red, yellow, and green arcs. The indicator displays lift information with 0 representing zero lift and 1.0 representing stall. Therefore, at 1.0 where full stall occurs, 100 percent of the available lift is being produced. At 0, zero lift is being produced. With speed brake, slat, and flap position information, the display is valid for all airplane configurations and weights. The green arc (0 to 0.60) is the normal operating range of the airplane. The amber arc (0.60 to 0.80) covers the area between the normal operating range and the caution area. The middle range of 0.55 to 0.65 is represented by a symbol in the center range of the indicator; it represents the optimum landing approach airspeed (V_{APP}) area. The yellow range (0.60 to 0.80) is a caution area where the airplane can be approaching a critical angle-of-attack. The red arc (0.80 to 1.0) is a warning area and represents the beginning of low-speed buffet to full stall. At an indication of 0.83 $\pm$0.02, in the warning range, the stick shakers will activate.

If an amber STALL WARN L-R annunciation appears in the crew alerting system (CAS) section of the EICAS display, it indicates that the angle-of-attack computer has detected a fault in the respective system and that it is inoperative. A chime will also sound. If the left system STALL WARN illuminates, the pilot's stick shaker will not operate; the optional angle-of-attack indicator will be inoperative, and the optional indexer will not operate. The respective fast/slow low speed awareness indicator (LSA) indication and slow speed warning will be inoperative unless the EFIS is reverted to the operational side, whereupon both sides will be driven by the operative system, except for the above mentioned items and the stick shaker. Refer to Electronic Flight Instrument System in this section.

If one stall warning system should become inoperative and the airplane approach a stall, the stick shaker warning from the opposite side can be detected through the control wheel.

The aircraft is monitored for excessive angles-of-attack. At certain high altitudes, above 35,000 feet, these high angles-of-attack could disturb airflow into the engines enough to cause one or both to flame out. To prevent this from occuring, the minimum speed warning system was incorporated.

If the critical angle-of-attack is reached, with aircraft altitude above 35,000 feet MSL, EICAS will alert the crew with a red CAS message, MINIMUM SPEED. The pilot must push forward on the control column, to reduce AOA, and increase airspeed immediately to prevent further airspeed degradation. Once the AOA is decreased sufficiently, the MINIMUM SPEED message will extinguish.

The Minimum Speed protection is inhibited at flight altitudes less than 35,000 feet and/or any time the slat/flap handle has been placed into any detent.

ANGLE-OF-ATTACK INDICATOR AND INDEXER

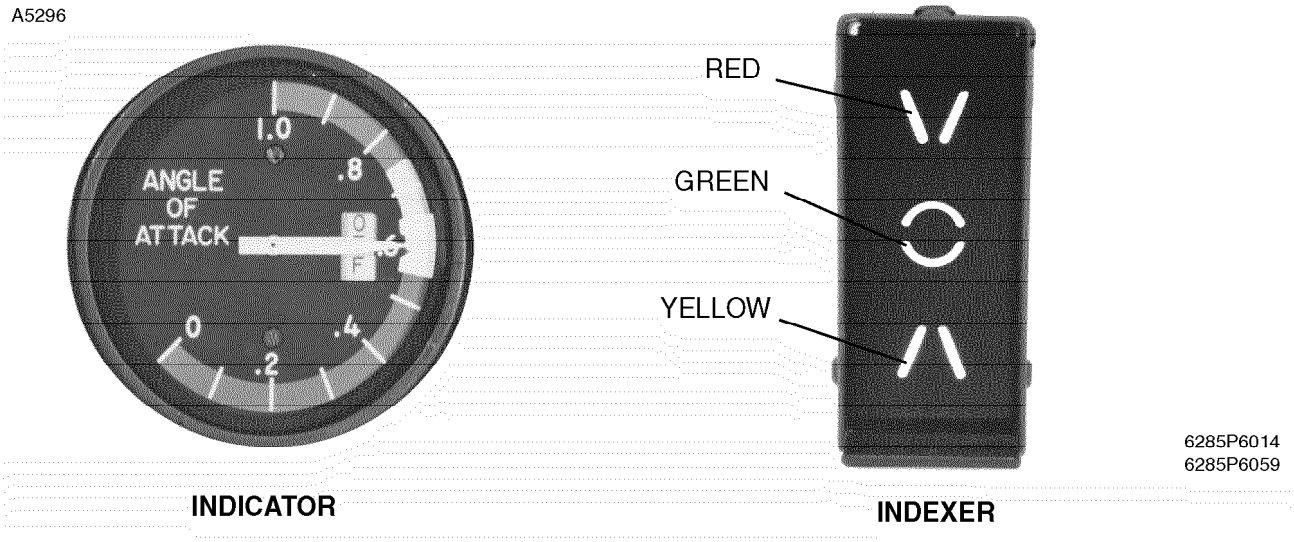

Figure 3-8

If an AOA PROBE FAIL L-R message appears in the CAS system, it indicates that the angle-of-attack system is inoperative. The effective result is the same as that discussed under STALL WARN L-R, above, and reversion is similarly possible.

An AOA HEAT FAIL L-R indicates that the respective angle of attack probe heater is inoperative. This message is also presented with an accompanying chime. An indication of anti-ice failure should be treated with caution, since a frozen probe could result in erroneous and dangerous indications. Again, reversion to the operative side is possible.

A red digital message of AUTO SLATS FAIL indicates that the angle-of-attack system has called for the slats to automatically extend and they have failed to do so. This message is accompanied by a double chime.

The approach indexer, mounted on the pilot's glareshield, provides a "heads up" display of deviation from the approach reference. The display is in the form of three lighted symbols which are used to indicate five angle-of-attack conditions. High angle-of-attack is analogous to low airspeed; low angle-of-attack is analogous to high airspeed. The following angle-of-attack (AOA) indications occur:

(1) Angle-of-Attack high; top (red) chevron lighted.
(2) Angle-of-Attack slightly high; top chevron and (green) circle lighted.
(3) Angle-of-Attack on reference; circle lighted.
(4) Angle-of-Attack slightly low; circle and bottom (yellow) chevron lighted.
(5) Angle-of-Attack low; bottom chevron lighted.

The top chevron points down, indicating that the angle-of-attack must be decreased to eliminate the deviation. The bottom chevron points up to indicate that the angle-of-attack must be increased to eliminate the deviation.

AVIONICS

The Model 750 is equipped with the PRIMUS 2000 Integrated Avionics System. It is an automatic flight guidance, a flight management, and an electronic display system with five cathode ray tube (CRT) display units. These three functions are operated using an interconnected system of cockpit controls and displays, sensors, and integrated computers.

The heart of the Model 750 avionics system is the PRIMUS 2000 integrated avionics system (IAS) which combines three subsystems into two identical interchangeable IC-800 integrated avionics computers (IACs). The subsystems are comprised of the five-tube electronic display system (EDS), the flight guidance system (FGS), and the flight management system (FMS). Five more subsystems are part of the PRIMUS 2000 system, and provide data to the major system. They are: the ADZ-840 air data system, the PRIMUS II integrated radio system, the PRIMUS 870 weather radar system, and the AA-300 radio altimeter system.

Long distance communication capability is provided by a Bendix/King high frequency (HF) transceiver. The dual flight management systems (FMSs) have GPS (global positioning satellite) function. A Magnastar Flight Phone, TCAS II (Traffic Collision Advisory System), EGPWS (Enhanced Ground Proximity Warning System), Global Airborne Flight Information System (AFIS), with SATCOM capability, and a cockpit voice recorder (CVR) are also installed as standard equipment. Optional systems such as a second high frequency transceiver, an emergency locator beacon, a second digital ADF, a flight data recorder (FDR), are available. Several different optional and additional sensors are available for the individual long range navigation systems. Single long range navigation systems may be installed with provisions for a second, or dual navigation systems may be installed at the factory.

VHF COMMUNICATION

HONEYWELL PRIMUS II REMOTE RADIO SYSTEM

The RCZ-850 integrated communications unit normally operates in the frequency range of 118 to 136.975 (or 137) MHz. The unit can be strapped to extend the upper range to 152 MHz for operation in parts of the world where those frequencies are used. The RCZ-850 unit is the communications component of the SRZ-850 integrated radio system. The COM radios are controlled from the RM-850 radio management unit (RMU), two of which are mounted on either side of the center pedestal forward of the throttles. COM 1, NAV 1, ADF 1, etc. are controlled by the left RMU and COM 2, NAV 2, and ADF 2 are controlled by the right RMU. The unit being controlled is annunciated on the control display unit of the RMU. The four radio functions: COM, NAV, ATC (Transponder), and ADF which are controlled by the RMU are all displayed on page one (main frequency select page) of the RMU. Tuning control for the desired function/parameter is obtained by pressing the line select key next to that function/parameter. The COM radio has a memory capacity for up to 12 frequencies to be selected and stored for later use.

In order to avoid unnecessary redundancy, only major points concerning operation of the Honeywell RCZ-850 integrated radio system are covered here. Additional features offered by the Honeywell RCZ-850 radio system are discussed in detail in the Honeywell Pilot's Operating Handbook, SRZ-850, Publication Number: 28-1146-50-04 dated April 1993, or later revision, which is provided with the Citation X airplane. The handbook must be immediately available to the flight crew for airplanes equipped with this radio system. Honeywell Publication A28-1146-121-00 dated February 1999, or later revision is required for those airplanes equipped with 8.33 kHz spacing radios.

Controls and Indicators

Control of the COMM radios is normally through the controls and display located in the upper left corner of the radio management unit (RMU). Any selectable parameter is changed by pressing the corresponding line key next to the displayed parameter which brings an amber box (cursor) to surround that position, which allows it to be tuned by the concentric knobs. Tuning of the COM radios is accomplished by three methods. The first method, discussed below, also provides methods to store frequencies in the memory locations. This is considered the "normal" method. Storing of the frequencies while tuning is not required, however, and is discussed there only because it may be convenient to store the frequencies as they are used for possible later use. The second method is "direct tuning", and the third is remote tuning through the Standby COM 1/NAV 1 control display unit control head which may be used when only battery power is available or desired, or in case of emergency. Operation of the Auxiliary COM 1/NAV 1 control display unit control head is discussed at the end of the VHF COM section.

Normal or preselect tuning of the COM radios is accomplished in the following manner: Press the line key next to the second COM frequency line displayed on the RMU. The amber box will move to that position if it is not already there; set the desired frequency by means of the concentric tuning knobs at the bottom of the RMU; press the upper left button on the RMU bezel (the one with vertical arrows), which will switch the pretuned frequency with the active frequency. When a frequency is preselected (set in the second line), it may result in the changing of a frequency which was identified by MEMORY, plus a number from 1 to 12, below the active frequency. The prior number has been stored in memory and the imposition of the second frequency over it is only temporary (which is identified TEMP) and will not result in the new frequency being stored in the memory, unless the STO button is pressed before the frequency is transferred to the active location (top line). In this case, the word TEMP will be replaced by the word MEMORY plus the memory position number. The pilot may progress through all 12 of the memory locations by pressing the line key near the line identified by TEMP or MEMORY in the COM box (upper left hand corner), which will move the amber box to surround that line. Turning either the large or small tuning knob will then select each memory space sequentially, showing the frequency stored there in blue on the line above the MEMORY annunciator line. Vacant memory locations will not appear. When the last occupied memory location is selected, the frequency shown on the second line, which was a temporary frequency in memory, will again be shown to occupy that space, plus the word TEMP, indicating that it is not stored in MEMORY.

When progressing through the stored memory locations, the frequency in the memory location being displayed can be transferred into the active position (tuned) simply by pressing the upper button (the one with the vertical arrows).

If the pilot desires to view all of the stored frequencies at once, he may press the PGE (page) button at the bottom of the RMU and the active frequency, with a maximum of six stored frequencies, will be displayed along with the number of their memory location. Pressing the line key adjacent to the MORE annunciator will advance the page to show the remaining frequencies with their location numbers of 7 through 12. If it is desired to insert a frequency in any particular location on these pages, move the cursor to that location by pressing the line key next to the desired memory location and the tuning knob will control that selection. The memory locations must be filled sequentially, i.e., blanks cannot be left open. If memory location eleven is vacant, for instance, and an attempt is made to store a frequency in location twelve, the word CAN'T will appear in amber at the bottom of the page.

It is not necessary to push STO to store the frequency. If deletion of a stored frequency is desired, press the line key adjacent to that memory location and press the line key adjacent to the DELETE ANNUNCIATOR. Higher memory locations will move down to fill the vacant space. If the pilot desires to place a frequency in a particular memory location, press the line key at that location to move the amber box there; press the line key at the INSERT location. The frequencies at the selected location and at higher location numbers will move up one location. The frequency in the selected location may then be modified and it will be stored.

If all the memory locations on the first memory page are not filled, the second memory page cannot be accessed.

Direct tuning of the COM radio is accomplished by selecting the cursor (amber box) to the COM preset location (second frequency line) and pressing the line key at that position for a minimum of three seconds. The preset frequency will disappear and the cursor will move and enclose the active frequency. Direct tuning is then available. Preset tuning may be restored by pressing the same button again.

An additional feature provided by the SRZ-850 integrated system is stuck microphone protection. The COM transmitter has a two-minute timer which cuts off transmission after that time has elapsed if the MIC key has not been released. A short warning tone is sounded a few seconds before the automatic shutoff. When the microphone cutoff has been activated at the two-minute limit, a MIC STK warning in red will be annunciated in the upper left corner of the RMU.

A TX annunciation at the top of the COM frequency window will annunciate whenever the transmitter is active.

When the second (first memory location) page of the display is selected, a "NARROW BANDWIDTH SELECT" annunciation will appear in the upper right corner of the display. Narrow band width is the normal selection, however, a wider bandwidth may be selected for use in areas where slightly off-channel transmitters are used. Its selection will result in improved reception in such areas. The selection is made by pressing the double arrow selector next to the annunciation. Another press of the selector will return the selection to the original.

If any of the components of the radio system fail to respond to tuning or operating commands of the RMU, the frequency or operating command associated with that particular function will be dashed out. This alerts the crew to a failure or abnormal system operation.

"Cross-side" operation of the RMU is possible by pressing the 1/2 button on the bottom of the RMU. This allows the operator to tune the opposite side radio system from that RMU. The tuning will be followed on the other RMU and so indicated. The system banners will be indicated in magenta color to serve as a reminder of the cross tuning condition.

Each time the integrated radio system is powered up with the landing gear squat switches activated, a power on self-test (POST) will be activated. If any radio or bus fails any test parameter, an error message will be displayed on a test results page. If no errors are detected, the main tuning page will be displayed.

PRIMUS II RADIO MANAGEMENT UNIT

A5297

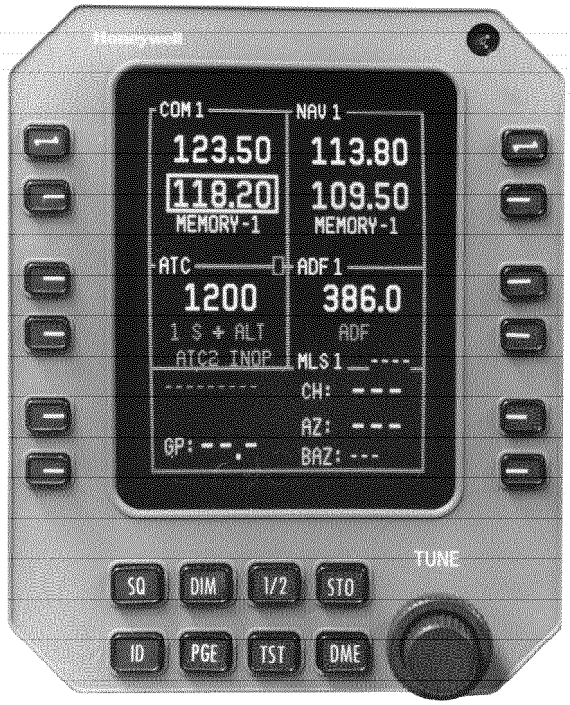

5685P6019

Figure 3-9

A pilot activated self-test (PAST) may be initiated by pressing the TST button on the RMU. A complete test will then be accomplished on the component represented by the window at which the yellow cursor is located. At the completion of the test, a legend will appear in the window for a short time to indicate successful completion. If the test is not successful, an error message will appear to indicate which circuit area has failed.

By pressing the DIM button on the bottom of the RMU, the tuning button may be used to dim the display. Exit from the dim mode is accomplished by pressing the DIM button again. Variations in ambient light will be automatically sensed, within limits, and automatically adjusted to maintain a desired setting.

Standby Radio Control Unit

The standby radio control (SRC) unit is located on the right instrument panel approximately above the right multifunction display unit (MFD). It may be used in two modes: normal and emergency. The modes are selected by means of the mode switch on the SRC. The mode selections cycle as the switch is turned. In the emergency mode, EMRG is displayed vertically along the top right edge of the display. The SRC is powered from a five-ampere circuit breaker (STBY NAV/COM) on the right circuit breaker panel. The circuit breaker is powered by the emergency DC bus.

PRIMUS II STANDBY RADIO CONTROL UNIT

A5298

5685P6062

Figure 3-10

In normal mode the SRC acts as an additional tuning source for the radio system. COM 1 and NAV 1 may be tuned by the SRC in this mode. The SRC verifies that the COM 1 RCZ-850 or the NAV 1 RNZ-850 (integrated COM and NAV units, respectively) are tuned to the correct frequency by checking the frequency echoed on the radio service bus (RSB). If the tuned frequency is incorrect, the frequency displayed on the SRC will be dashed out. If the appropriate RMU is illuminated, the frequency change will be seen to appear in the active display. In normal mode, the radios which are tunable by the SRC (COM 1 and NAV 1) may be also tuned from the applicable RMU. If tuned from the RMU, the frequency will also be tuned on the SRC.

In emergency mode, operation of the SRC is identical on the part of the operator. The internal tuning of the system differs in that it does not read and compare frequencies on the RSB; whatever frequencies are set in the SRC are transmitted to the appropriate NAV or COM unit and that frequency is tuned.

When tuning the standby radio control, COM frequencies are displayed on the top line and NAV frequencies on the bottom. An arrow cursor, which appears to the left of the displayed frequencies may be toggled between the NAV and COM frequencies by pressing the double arrow (transfer) switch. The line on which the arrow appears is then tunable by the tuning knobs on the SRC.

The SQ push button toggles the COM squelch open and closed. When the squelch is open, SQ is annunciated in the right center part of the display.

When the EMER button is selected on the audio panel, the NAV AUDIO push button toggles the NAV AUDIO off and on. When NAV AUDIO is on, it is summed in with the COM audio. NAV AUDIO will be annunciated at the center left of the display.

Any time the COM transmitter is being keyed, the TX annunciator in the center of the display will appear.

VHF NAV

The RNZ-850 integrated navigation unit operates in the frequency range of 108.00 to 117.95 MHz. The RNZ-850 system encompasses the functions of VHF NAV, localizer and glideslope receiver, and marker beacon receiver, as well as the addition of functions to ADF and DME which, in conventional systems, are separate units. Operation of the marker beacon system is discussed under "Marker Beacon System", below.

Glideslope paired frequencies are tuned with the published ILS frequencies as in standard VHF NAV practice. The RNZ-850 is the navigation component of the SRZ-850 integrated radio system. The two NAV integrated receivers are controlled and tuned in a similar manner to the RCZ-850 COM units discussed under VHF COMM, above. A minor difference is the requirement of the PGE (page) button to be pressed twice in order to access the NAV page which shows the first six NAV memory locations. Otherwise, changing, storing and deleting frequencies is accomplished in the same manner.

The NAV frequency window on the main tuning (first) page has an additional function called the "DME Split Tuning Mode". This function involves "DME hold" plus some additional features, and is discussed under Distance Measuring Equipment in the Pulse Equipment part of this section.

NAV 1 can be tuned by the standby radio control unit (SRC) as well as by the RM-850. Tuning by means of the SRC is discussed under Standby Radio Control Unit, above.

Both NAV 1 and NAV 2 are selectable on the pilot's and copilot's SC-840 source controller to be displayed on either EHSI. NAV 1 is displayed by the BRG "**O**" knob and NAV 2 is displayed by the BRG "◇" knob. Either NAV 1 or NAV 2 may be selected by the NAV pushbutton to provide guidance to the flight director system. The NAV 1 or NAV 2 selection switches with each press of the button. If NAV 1 or NAV 2 is selected on both sides (by pilot and copilot) the annunciation in the EHSI will be in amber instead of white. The source controller transmits data only to its on-side display controller.

Operation of the NAV displays on the primary flight displays (PFDs) is discussed under Primary Flight Displays and SC-840 Source Controller in this section.

MARKER BEACON SYSTEM

The marker beacon, VOR, localizer and glide slope receivers are all combined into one navigation receiver. Each NAV receiver encompasses all of those functions. System operation is similar and equally automatic if either the standard or optional VHF radio systems are installed. Marker beacon information is displayed on the right side of the electronic attitude director indicator (EADI) display in the primary flight display (PFD), below the glide slope scale. When the marker beacon is first approached and annunciated, the boxed identification (O-outer, M-middle, I-inner) flashes.

NAV 1 provides signals to the following:

(a) Marker beacon data to the pilot's marker beacon annunciations in the pilot's electronic attitude indicator display (EADI).

(b) VOR, localizer (ILS), and marker beacon signals to the audio control panels.

NAV 2 provides signals to the following:

(a) Marker beacon data to the copilot's marker beacon annunciator in the copilot's electronic attitude director indicator display (EADI).

(b) VOR, localizer (ILS), and marker beacon signals to the audio control panels.

The marker beacon receivers are in operation whenever the NAV receivers are ON. They operate on a frequency of 75.00 MHz. The annunciators in the pilot's and copilot's EADI's are part time displays. A colored box identifies the location of the marker beacon annunciator when a localizer frequency is tuned. The marker beacons are annunciated by the appropriately colored letters: a blue O for outer marker, an amber M for middle marker, and a white I for inner marker. The letters appear in the box when the marker beacon receiver is activated. A marker beacon tone is transmitted to the audio control panel and will be heard in the speaker/headset, if selected. A 400 Hz tone is heard at the outer marker, a 1300 Hz tone at the middle marker, and a 3000 Hz tone for the inner marker.

The audio muting system (MKR MUTE) provides the pilots with a method of temporarily cutting out the marker beacon audio. When pressed, the marker beacon signal is muted for approximately 30 seconds. The MKR MUTE switches (push buttons) are located on the audio control panels.

AUTOMATIC DIRECTION FINDER (ADF)

The automatic direction finder (ADF) function of the Primus II remote radio system is provided by the DF-850 ADF receiver module which is a component of the RNZ-850 integrated navigation unit. As discussed in the COM section above, the tuning of the complete system, which includes the ADF, is accomplished by means of the radio management unit (RMU), the RM-850.

The receiver has a frequency range of 100.00 to 1799.5 KHz in 0.5 KHz increments. A strap selectable option is available which allows tuning of marine emergency frequency of 2181 thru 2183 KHz.

Four modes of operation are available on the DF-850 ADF: ANT (Antenna), ADF (Automatic Direction Finder), BFO (Beat Frequency Oscillator), and VOICE. In ANT mode, the ADF receives only and does not compute bearing information. In ADF mode, the system receives signals and computes relative bearing to station. In BFO mode, a beat frequency oscillator is added to the signal for reception of CW signals. In VOICE mode, the reception bandwidth is widened for improved voice audio on the frequency. The VOICE mode is not used for navigation. Bearing information is available only in ADF and BFO modes. If ANT is used for tuning, random ADF needle searching is prevented. The modes are selected by pressing the lower line key adjacent to the ADF window. Progression is: ANT; ADF; BFO; and VOICE. The mode changes each time the line key is pressed. When the tuning cursor (amber box) surrounds the lower ADF Line, the ANT, ADF, BFO, and VOICE Progression may also be selected by turning the tuning knob.

When the line select key adjacent to the frequency window of the ADF is pressed, the cursor will move to the ADF frequency window and the ADF may be tuned by the tuning knobs. Tuning will increment in steps of 0.5 KHz with the small knob and 10 KHz with the large knob. If the knobs are turned faster, larger increments are selected for each turn enabling large changes to be made in much less time. The rate of increased tuning speed is proportional to the rate the knobs are turned.

The ADF has a "scratch pad" memory which will store one frequency. This is accomplished by selecting the desired frequency and pressing the STO button for two seconds. To retrieve the frequency from memory, press the line select key adjacent to the ADF frequency window for two seconds.

ADF 1 bearing information may be selected on the "**O**" bearing needle of the pilot's and copilot's electronic horizontal situation indicators (EHSI) display. The "◇" bearing pointer displays ADF 2, when selected. Selection is controlled by the BRG "**O**" knob and the BRG "◇" knob on the respective SC-840 source controller.

The ADF bearing pointer may be unreliable during HF radio transmissions.

TRANSPONDER

The ATC (transponder) function of the SRZ-850 Integrated Radio System is provided by the RCZ-851 transponder module, which is a sub-unit of the RCZ-850 Integrated Communication Unit. It functions as a 4096 code mode A transponder, as well as providing mode C (altitude) and mode S (collision avoidance) information. If the optional traffic alert and collision avoidance (TCAS) system is installed, an RCZ-851E transponder is provided. The RCZ-851 transponder is a diversity transponder, meeting higher performance requirements, however, transponder operation remains the same.

General tuning information concerning the SRZ-850 system is discussed under PRIMUS II REMOTE RADIO SYSTEM, VHF COM in this section. Specifically, tuning of the transponder is accomplished by pressing the line key adjacent to the desired ATC function on the left side of the main tuning page which is displayed on the RMU. The ATC window has two lines. The top line represents the tunable transponder codes and the second line represents transponder modes. When the line key adjacent to the transponder code line is pressed, the amber box (cursor) will surround the code digits, which are then tunable by the tuning knobs. The large knob controls the left two digits and the small knob controls the right two digits.

Pressing the mode select line button moves the cursor box to the mode select annunciator which connects the tuning knobs to the window. Either knob may then be used to select modes in the following sequence:

STANDBY - Transponder ready but not replying.
ATC ON - Replies in Modes A, C, AND S with no altitude reporting.
ATC ALT - Replies in Modes A, C, AND S with altitude reporting.
TA ONLY - TCAS traffic advisory (TA) Mode enabled (if TCAS is installed).
TA/RA - TCAS traffic advisory/resolution advisory (RA) enabled (if TCAS installed). (the sequence repeats)

Only one transponder is in operation at one time; the opposite one is held in standby for instantaneous operation, if required. The system in operation is controlled by the 1/2 select key located on the bottom of the RMU case. Pressing the key progressively cycles the transponders.

The system in operation is indicated by a "1" or "2" in front of the selected mode.

If the Mode S transponder squitter monitor fails, a SQUITTER INOP or ATC ERR warning message will be displayed in red at the bottom of the ATC window. This indicates that the MODE S transponder has an impaired or failed MODE S ability to operate as part of a collision avoidance system (TCAS).

A transponder code may be stored in memory. To accomplish that, select the desired codes and press the STO button for two seconds. To retrieve the code from memory, press the line select button for two seconds.

The IDENT function of the transponder may be activated by pressing the ID button on the RMU or by pressing the ID button on the inboard side of either the pilot's or copilot's control wheel. Pressing any ID button will activate the ID mode for approximately 18 seconds. An amber ID annunciation will appear along the top edge of the transponder window during ID mode activation.

DISTANCE MEASURING EQUIPMENT (DME)

The Primus II DME system is comprised of two RNZ-850 integrated navigation units, two NV-850 VHF NAV receivers and two DME-850 distance measuring modules. The DME transmitters of the DME-850s work in the L frequency band, and the receiver frequency range is from 962 to 1213 MHz. DME tuning normally follows the VHF NAV receiver tuning which selects the DME frequencies paired to the VHF VORTAC published frequencies. The PRIMUS II, however, has a special "hold" function which also allows the tuning of military TACAN channels in order to receive the DME portion of the TACAN signals.

DME information is presented on the pilot's and copilot's EHSI displays; the source of the data is identified in the upper left side of the EADI and the range is in the upper right side. VOR 1 or VOR 2 may be selected on either display. DME selection will normally follow the paired selection of the tuned VOR (on the SC-840 source controller), unless the 'hold' function is utilized. A selection on one display (the pilot's, for instance) will not affect the selection on the opposite display, except that the annunciation label (data source) will change to amber color to indicate that the source of the data is the same for both sides, or that there is a cross-selection condition on both sides. If the pilot desires to select a new VOR frequency, but hold the DME station, the DME button on the bottom of the RMU is pressed and the VOR selection (bearing) may be retuned, but the DME data will be held on the previous station. In this case the nomenclature (DME) will be displayed above the second line of information (which will be the frequency of the newly tuned VOR station) and the digital identification of the station on which the DME information is being held will appear to the right of the DME nomenclature. This serves to remind the crew members that the DME is tuned to a different source than the VOR, and to identify that source. Pressing the DME button a third time will cause the NAV window to resume its normal mode, with active and preset display, and will also cause the DME to return to its condition of channeling with the active VOR frequency.

Each DME has the capability to scan six channels, simultaneously tracking four selected DME channels for distance, ground speed and time to station, as well as tracking two stations for identification (IDENT) functions. Of the four channels of which it can track three functions (DIST, GS and TTG), two are dedicated to the flight management system(s) (FMS).

Normally, one DME station will be tuned to an active VOR frequency, which is annunciated on the top line of the NAV tuning window of the radio management unit (RMU). Another (preset) VOR frequency may be selected in the preset frequency window. When a frequency is set in the preselect window, the system will already be tracking the preselected station so that there will be no delay when that frequency is transferred to active.

NAV tuning, which normally also selects the associated DME frequencies, is discussed under VHF NAV in this section. Special tuning procedures applicable to DME, which are in addition to the NAV tuning, are discussed below.

The DME has a "split tuning" mode which operates somewhat like conventional HOLD functions, but provides other options. Pressing the DME button on the bottom of the RMU will divide the NAV window into two windows. The top window will remain the active VOR frequency. H will be annunciated on the bottom line, indicating that the DME frequency is holding with the active frequency which is displayed on the top line. The bottom line will be labeled DME and will have in it the active frequency displayed in VHF (VOR) format. The DME may then be tuned by pressing the line select key and changing it to a new channel. Pressing the DME button again will cause the DME (lower) window to change to a TACAN channel presentation. TACAN channels, along with their related W, X, Y, and Z channelization nomenclature will then be tunable with the tuning knobs. The DME function of all 126 TACAN channels may be tuned. No azimuth information is received in this mode. A third press of the DME button causes the NAV window to return to its normal active/preset presentation and the DME will resume tuning with the active frequency.

AUDIO CONTROL UNIT

Two Honeywell Primus II digital audio control units are supplied with the Honeywell Primus II remote radio system. Digital transmission of audio from remote units to the audio panels differs from conventional audio systems in that it requires one twisted pair of wires rather than many twisted pairs to achieve the same performance. The control units are mounted on the left side of the pilot's instrument panel and the right side of the copilot's panel respectively.

The panels have three rows of combination audio ON/OFF switches and volume controls. The small round knobs serve as audio on/off switches when pressed. When the switch is latched in, the audio for the particular receiver it serves will be off. When pressed again, the switch will move outward turning the audio on. When the audio is on, the knob of the switch may be used as a volume control. Turning it clockwise will increase the volume; counterclockwise will decrease it.

Two larger knobs on the lower part of the control panel serve as volume controls for the speaker and headset respectively, of the pilot and copilot. These knobs are in series with the smaller individual volume controls. This allows a volume selection to be made on the individual radio volume control, and then a final overall selection to be made by means of the speaker or headphone control, resulting in a more flexible individual control of all available audio signals.

A row of microphone selector buttons (push-push latching switches) is located across the top of the control panel. These buttons connect the pilot's or copilot's microphone to the selected transmitter. The receiver for the selected radio or interphone will also be selected regardless of the selection of the audio on/off switches. For night operation, a light in the top of the microphone selector button is illuminated.

The emergency COM (EMER) microphone switch, located at the upper right corner of the audio panel, when depressed connects COM 1 transceiver directly to the aircraft microphone and headphone. All electronic circuitry is eliminated and all other audio panel modes are disabled in this mode. NAV 1 audio will also be directed into the headset controlled by the panel on which EMER is activated, if NAV AUDIO is selected on the standby radio control unit (RCU).

AUDIO CONTROL PANEL

A5299

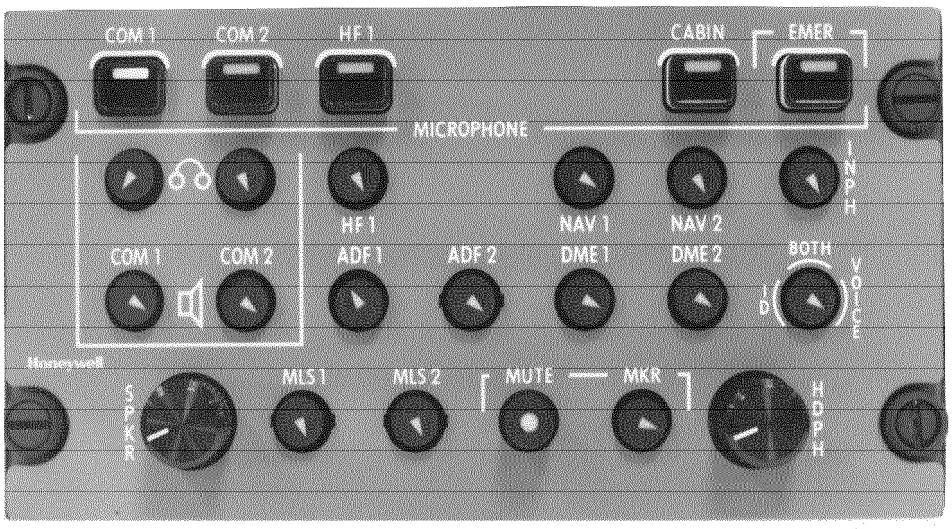

6785P1008

Figure 3-11

An ID/VOICE selector is located on the right center of the audio panel. It is not a latching switch, but is active whenever NAV 1 or 2 and/or ADF 1 or 2 is selected. If BOTH is selected, both ID and voice will be heard; if ID is selected, voice signals will be filtered out and coded identification signals will be heard. If VOICE is selected, coded signals will be filtered out and voice will be heard.

The marker mute and marker aural on/off/volume control are located on the bottom row of switches on the panel. The marker mute is used to temporarily silence the marker beacon audio. Momentarily pressing the MUTE button will mute the beacon signal as long as it remains above a minimum threshold level. When it drops below the level, a time-out sequence will begin, which will mute it for a fixed period of time. The MKR button may be pressed in to disable the aural signal. When the button is out (pressed again) the marker beacon volume can be controlled with the knob, however, maximum counterclockwise rotation will not totally turn down the volume since a minimum signal is automatically retained in order not to miss the aural marker signal if it has been selected on.

HONEYWELL TRAFFIC AND COLLISION AVOIDANCE SYSTEM II (TCAS II) WITH HONEYWELL PRIMUS II RADIO SYSTEM

The TCAS II system visually presents traffic advisories on the multifunction displays to the flight crew. The system interrogates every transponder equipped airplane within the selected range for bearing and altitude data. It uses this data to establish a track for collision avoidance predictions.

The TCAS computer performs functions that determine range, bearing, and altitude of intruder aircraft based on information computed from or contained in the reply messages. Bearing can only be determined for intruder replies received on the system directional antenna. Altitude can only be determined if the intruder is reporting altitude in its transponder's reply message.

Based on the information that can be extracted from or computed from the reply, the TCAS computer evaluates the threat potential of the intruder by calculating intruder closing rate and position relative to own aircraft. Based on this evaluation the TCAS computer categorizes the intruder as a nonthreat, proximity or traffic advisory.

For traffic advisory category aircraft, the TCAS computer outputs traffic advisory symbol position and alert data to the EFIS. The TCAS computer also outputs traffic advisory alert voice messages to the cockpit audio system.

For proximity and nonthreat aircraft, the TCAS computer outputs proximity or nonthreat traffic symbol position data to the EFIS. Voice alerts are not generated for proximity or nonthreat category aircraft. Intruders which are not reporting altitude are also detected and tracked. By using the interrogation reply, the TCAS can accomplish the following:

(1) Compute range between own airplane and an intruder.
(2) Compute relative bearing to the intruder.
(3) Compute altitude and vertical speed of an intruder (if reporting altitude).
(4) Compute closing rate between an intruder and own airplane.
(5) Issue a traffic advisory (TA) when the closing traffic is in the vicinity.
(6) Issue a resolution advisory (RA) in order to maintain safe vertical separation.
(7) Track 45 aircraft at once, displaying up to 30, and can coordinate a resolution advisory for up to three intruders at once.

Certain functions of the traffic and collision avoidance system (TCAS) are tuned through the radio management unit (RMU). Other selections are made with controls on the multifunction display (MFD). For information on the MFD, refer to Flight Guidance System in this section. The ATC/TCAS control page display provides displays and controls for the TCAS modes. To access the page, the page (PGE) button is pressed, and the ATC/TCAS line key is then pressed.

On the ATC/TCAS control page the additional selections which follow may be made. System selection (INTRUDER ALTITUDE) is possible between two altitude modes; relative altitude or absolute altitude modes. In relative altitude (REL) (green) mode, the difference between the intruder airplane's altitude and own airplane altitude is displayed. In absolute altitude mode (FL), the flight level (cyan) of the intruder airplane is displayed. If FL is selected on the Honeywell system, the selection will return to REL in 20 seconds.

A TCAS selection may be made to display only traffic that constitutes a potential threat or all traffic. The TA DISPLAY line key is used to select AUTO, whereupon traffic will be displayed on the multifunction display (MFD) only if it is a TA (traffic advisory) or RA (resolution advisory) target. MANUAL on the same key selects an MFD display in which all TCAS traffic within the viewing airspace will be shown.

In the STANDBY (green) mode the TCAS computer shows no traffic displays and does not reply to other airplane interrogations. The standby mode is selected by pressing the STANDBY line key on the main tuning page, thereby causing the transponder not to transmit and disabling the TCAS system.

The primary TCAS selection is displayed in the lower left window of the RMU main tuning page. Control of those displayed functions is possible by means of the line keys and/or the tuning knobs, once the tuning box is moved to the desired function with the line key. Range and altitude bands are selectable. The following are included:

Altitude band select - With the NORMAL altitude band selected (green) the altitude display encompasses a range of ±2700 feet; with ABOVE (cyan) selected the altitude display changes to a range of -2700 feet to +7100 feet from own airplane altitude. If BELOW (cyan) is selected, the range becomes from, -7100 feet to +2700 feet from own airplane altitude.

Range (green) - Selectable at ranges of 6, 12, 20, and 40 NM. Selection is made by pressing the RANGE line key or by turning the tuning knobs once the tuning box is transferred to the RANGE function by pressing the line key.

TCAS Display 1/2 - This is the annunciation of which side's (pilot or copilot) TCAS display features the RMU is controlling. When the cursor is in the window, the 1/2 button is used for the selection. At power down the selections store.

Flight ID is a mode S coding which reflects the current flight's call sign. The outer tuning knob moves the character position designator and the inner tuning knob selects the desired alphanumeric character.

The flight level 1/2 selection on the ATC/TCAS control page displays the transponder's encoded altitude and the air data source (digital air data computer 1 or 2) for that altitude (i.e., DADC 1 and DADC 2).

The TCAS system has a self-test which may be activated by pressing the TST key. “TEST” will be displayed when the test is active. During the test the TCAS traffic displays will show test pattern traffic symbols, red and green resolution advisories, during the test sequence. The sequence takes approximately ten seconds. If the test is completed successfully the system will return to the set operating modes and aurally annunciate TCAS SYSTEM TEST OK on the cockpit audio system. For a failure in the TCAS system “TCAS FAIL” will be displayed in yellow on the TCAS display and the audio system aurally annunciates TCAS SYSTEM FAIL. TEST will operate either on the ground or airborne.

The TCAS system requires an operating mode S transponder with encoded altitude data included in the interrogation replies. When the transponder is set to STBY, the receiver transmitter may automatically change to standby mode or turn itself off.

TCAS ZOOM WINDOW

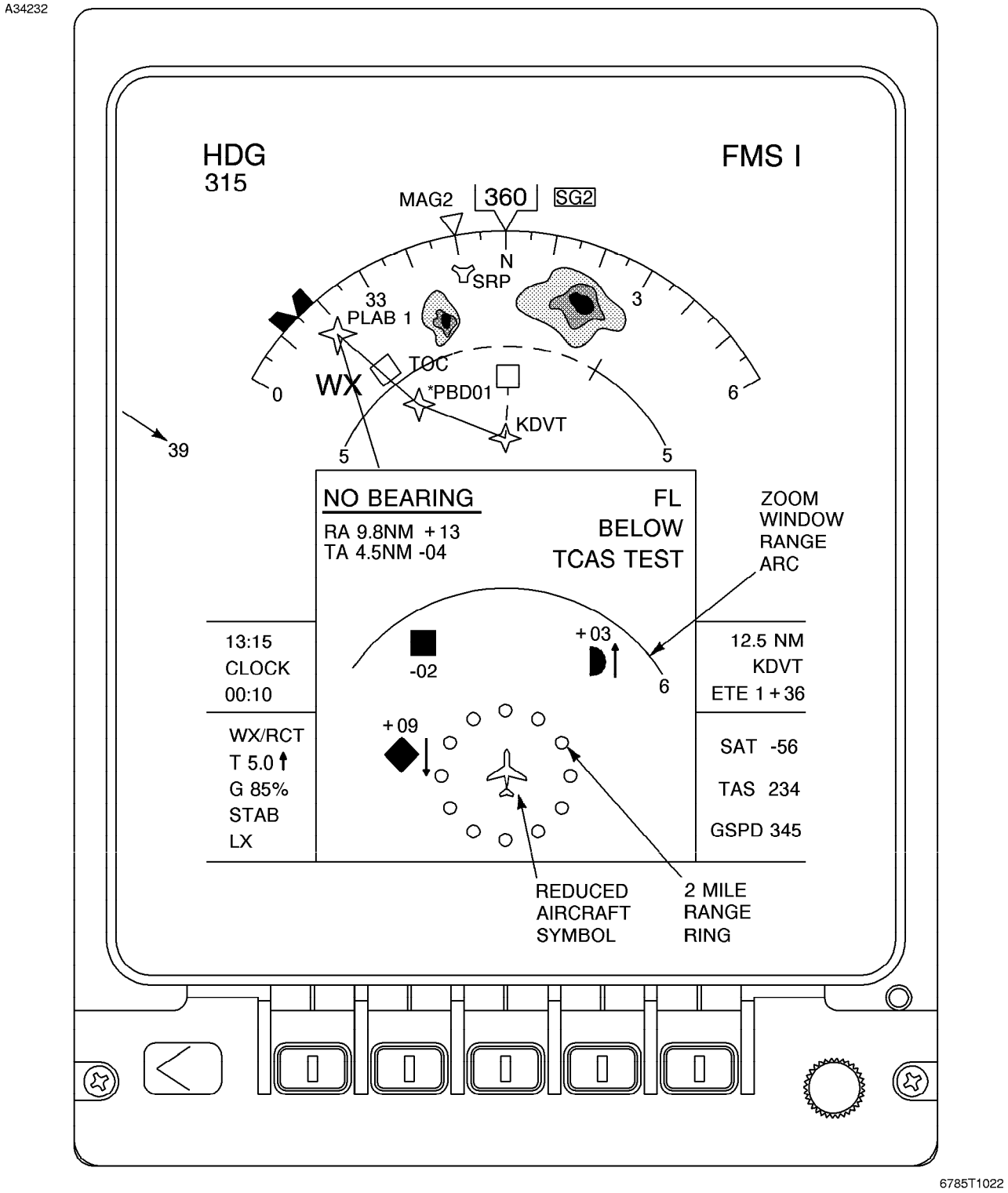

Figure 3-12 (Sheet 1 of 2)

TCAS MAP MODE WITH TRAFFIC ENABLED

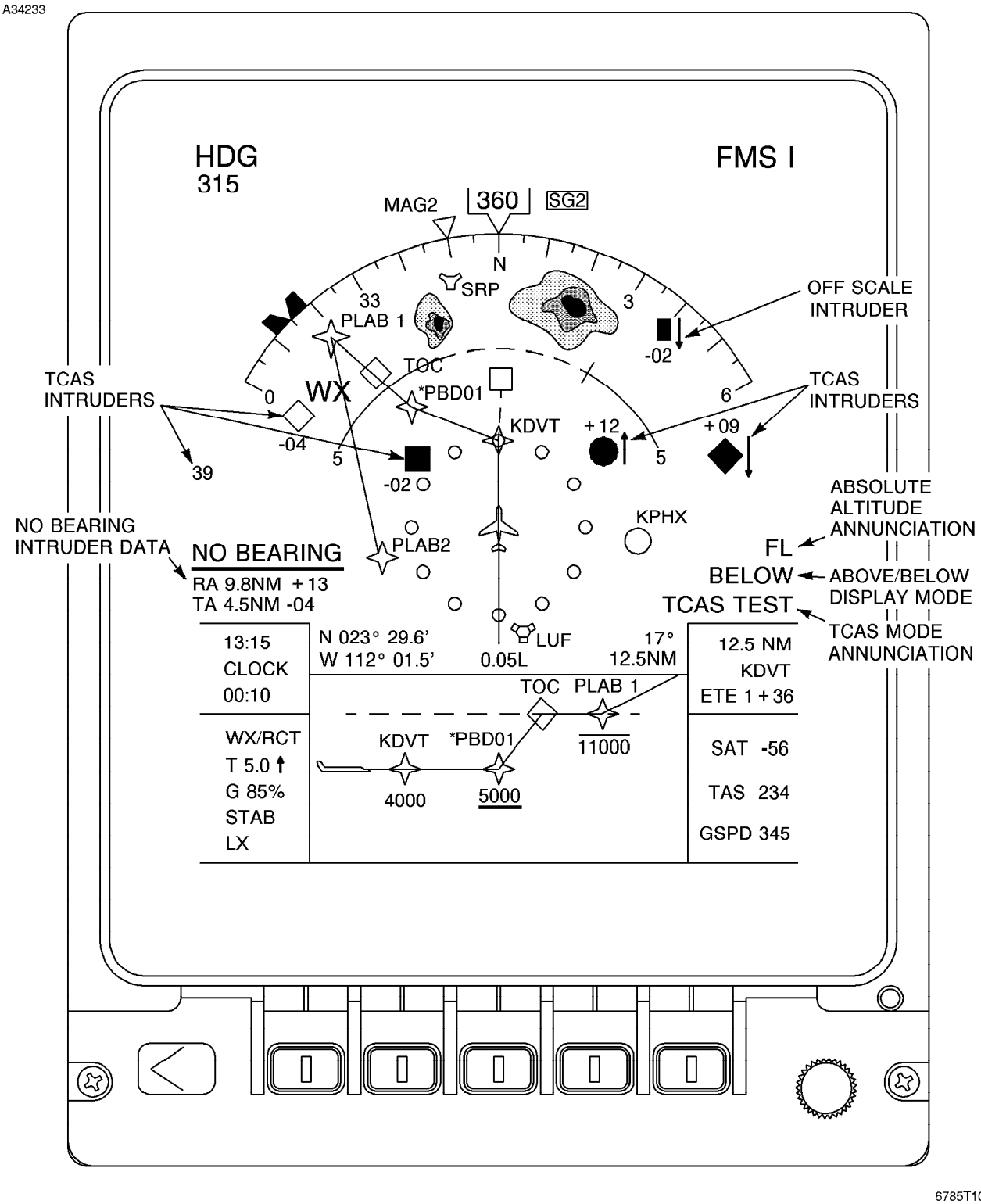

Figure 3-12 (Sheet 2)

HF COMMUNICATION

KHF-950 WITH KFS-594 CONTROL PANEL

The KHF-950 is a 150-watt transceiver that provides 280,000 frequencies at 100 Hz increments with 99 channel preset capability in the HF band (2.0000 to 29.9999 MHz). It operates in AM or single sideband. The KFS-594 is a compact control panel which has all the controls and indicators located on the radio set control.

Controls and Indicators

All controls and indicators are located on the radio set control. A two position FREQ/CHAN switch in the upper right corner determines the form of operation. The depressed position establishes the channelized form of operation. The flush position provides direct frequency operation. A momentary MODE pushbutton switch, next to the FREQ/CHAN switch, selects the mode of operation (LSB, AME or USB). This switch is not active during transmit. Frequency or channel selection is controlled by two concentric knobs on the lower right of the panel. The outer knob is used for frequency selection and the inner knob for channel. Frequency control is not functional when the FREQ/CHAN switch is in the CHAN position.

Channel frequency can be changed by use of the PGM and STO switches on either side of the concentric tuning knobs. An ON/OFF/VOLUME control applies power to the system and controls volume. A SQUELCH knob provides control of the squelch threshold. A pull/on CLARIFIER knob is used for fine tuning up to 250 Hz and is active during receive operation only.

USB is used for communication with other stations operating in single sideband on the upper sideband. AME allows communication with the older AM or AME stations. AME mode is not compatible with stations operating on USB. LSB mode is disabled.

An optional second KHF-950 may be installed, in which case an additional KFS-594 control panel will be installed. It is usually installed at the bottom of the pilot's instrument panel.

To Tune the HF system antenna coupler to the frequency selected, rotate the VOLUME knob out of the OFF detent. Receiver frequency will be displayed after approximately one minute of warmup. Key the transmitter by momentarily pressing microphone button. The antenna coupler will tune automatically. Channel number will continue to be displayed; however, frequency will be blanked until automatic tuning is complete. After tuning, adjust for desired squelch threshold. During reception, adjust CLARIFIER control for maximum signal clarity or most natural sounding voice.

An HF XFER push button/annunciator light is provided on the panel next to the HF control. It provides the capability of transferring HF communications to the Flitefone Six. Either pilot may establish communication, alert the passenger by CABIN CALL or by using the dedicated interphone button on the Flitefone (or if no intercom button is installed, by dialing 42#) and then, when the flitefone handset is out of the cradle, pressing the HF XFER button; the button will illuminate. The passenger may then receive HF transmissions over the passenger compartment handset and answer by pressing the push-to-talk handset switch

HF COMM KFS 594

A5307

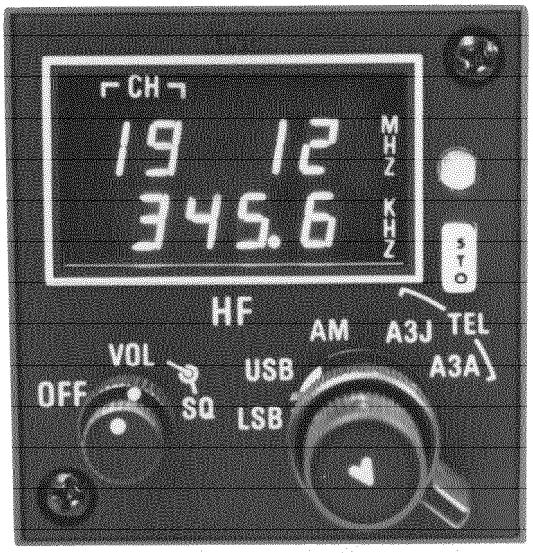

6284P6062

Figure 3-13

which will key the HF transmitter. The button will remain illuminated until the passenger communication is complete, and the handset is returned to the cradle. If necessary the crew member can regain control of the HF by pressing the applicable HF mic button on the audio control panel (or, in the case of Collins radio installations, selecting it on the rotary switch) and pushing the push-to-talk button on the control wheel. The system is designed primarily to allow the passenger to use the marine radio-telephone system, or ARINC communications.

HF and VHF SELCAL

The SELCAL system is a five-channel, 16-tone decoder designed for use with HF and VHF communications radio receivers. In order to receive the SELCAL codes and be alerted to a call, the radio must be tuned to the proper frequency on which a call is expected, and the audio switch for that radio may be turned off. In this case there must be no intent, of course, to receive regular uncoded communications.

The primary purpose of the HF SELCAL option is to allow the crew members to turn off the HF or VHF receiver at the audio panel and not have to continuously monitor it. A white digital message (SELCAL HF 1-2, SELCAL VHF 1-2, etc.) will appear on the crew alerting system (CAS) portion of the engine indicating and crew alerting system (EICAS) in order to call attention to an incoming call on the selected HF or VHF frequency. A chime will also be heard. In order to answer the call the crew member must reset the system by selecting the microphone selector switch on the audio panel to the annunciated radio (if not already there) and press the push-to-test switch on the control wheel (or microphone). Normal communications will then ensue. While the EICAS SELCAL digital annunciation is illuminated, an additional incoming call cannot be detected on that radio, so it is important to acknowledge and respond to calls promptly. The SELCAL system is passive, in that it does not interfere with regular HF or VHF communications.

When power is first applied to the SELCAL system, the system performs a power on self-test. If it finds an error in the programmed code, annunciators will flash, an audio will be heard, and the unit will not respond to reset commands. A self-test may also be generated by placing the rotary TEST switch, located on the center pedestal, in the annunciator test position. While in annunciator test all SELCAL receiver annunciators will illuminate and an audio signal will be heard. If a channel should fail the test, an annunciator for that channel will not illuminate. If the programmed code is invalid, no annunciator will illuminate and the unit will appear to have done nothing.

EMERGENCY LOCATOR BEACON (Optional)

The optional locator beacon system consists of a three-frequency emergency locator transmitter (ELT) designed to assist in locating a downed airplane. The ELT has a self-contained battery pack which must be changed every three years when one cumulative hour of operation is logged on the battery pack. The system is activated automatically, by an impact of 5 +2, -0 G's along the flight axis of the airplane, or manually by a pair of switches (ON/ARMED/RESET and HORN CANCLD) on the aft end of the right circuit breaker panel. When the ELT is activated, a modulated omni-directional signal is transmitted simultaneously on the VHF and UHF emergency frequencies of 121.5 and 243.0 MHz, respectively, and the international emergency satellite frequency of 406.0 MHz. The modulated signal is a downward swept tone signal which starts at approximately 1600-1300 Hz and sweeps down to 700 Hz every two to four seconds continuously and automatically.

When the ELT transmits on 406.0 MHz, it transmits the airplane tail number and identification, which is picked up by satellites and retransmitted to monitoring stations world-wide. The satellites also have the capability of providing a fix on downed airplanes, pinpointing their location.

The locator beacon system is normally controlled from the guarded ON/ARMED/RESET switch located on the right circuit breaker panel. The ON position activates the emergency locator transmitter (ELT) and the ARMED position arms the impact switch. The RESET position on the switch is used to electronically reset the ELT transmitter if it has been energized by the G (impact) switch because of a hard landing, sudden stop, or some other cause. RESET will turn off the transmitter and re-arm the G switch. If the ELT becomes activated a light will flash in the cockpit and an aural signal will be heard. The HORN CANCLD push-button is used to silence the aural warning.

The ELT is installed in the airplane aft tailcone equipment area, being bolted to the upper equipment area. It is housed in a sealed case, and when connected to the airplane system, is powered by the airplane 28-volt DC system. It can be powered by the airplane batteries. When removed from the airplane, or if activated when there is no power available from the airplane system, it operates on its own 5-ampere-hour 12-volt lithium batteries which have a lifetime of at least fifty hours of operation. Removing the ELT from the airplane requires gaining access to the ELT by removing the ceiling panel in the baggage compartment and removing the ELT bolts by using a wrench, and by disconnecting the external antenna connector. It can be used as a portable installation, since its battery pack is self contained and a master switch is included on the transmitter, however, the installation was not specifically designed for the ELT to be used as a portable unit. A two-position ON/ARMED - OFF switch is located on the unit, as well as an indicator light which will blink when it is

transmitting. Proper operation is indicated by a series of quick flashes followed by a flash rate of once every three seconds. The ELT will start transmitting after a thirty-second delay after being turned on. The ON/ARMED - OFF switch must be turned OFF before the unit is removed from the airplane or it will begin to transmit, since the switch is automatically activated by a magnetic switch upon removal.

The external antenna for the emergency locator beacon system is located on top of the aft fuselage forward of the vertical fin, nearly adjacent to the engine intakes.

MAGNASTAR C-2000 DIGITAL AIRBORNE TELEPHONE (Optional)

The MagnaStar C-2000 can be used to place and receive voice calls, send data transmissions via modem as well as send and receive facsimile transmission. A central processor on-board each MagnaStar equipped aircraft controls and coordinates the handset(s) for all voice calls, data and fax modem transmissions, and in-cabin intercom functions. The MagnaStar continually scans and monitors ground based radio cells for the clearest usable communications channel while inflight. The LCD on the handset indicates the availability of a channel. The system searches for the optimum channel when a call is initiated and connects the calling and receiving parties. The system allows for multiple handsets and two simultaneous calls may be placed (voice, fax, or data). Reliable and clear connections are ensured at all times through digital technology. Coverage is provided throughout North America above 17,000 feet (much of the United States is covered at lower altitudes) and additional coverage is available on the ground at many major domestic airports.

All operations are performed via the handset. The handset features adjustable volume and a telephone system numerical keypad. The two-button volume control is located on the side of the handset and should be used to adjust the volume to the users desired level. Two additional keys are also included: “+” and “End Call.” The LCD on the handset displays information and “menu” style selections, making the need for separate instruction uncommon. A credit card reader is also provided in the handset allowing optional billing to individual user accounts.

NOTE

> The standard handset has a magnet activated hook switch in the holder and therefore operates in a typical “on-hook” and “off-hook” manner. Additional (optional) handsets custom mounted or portable (which plug into jacks) do not provide the hook switch. To place these handsets “off-hook,” depress the “+” key; to return the phone to “on-hook,” depress the “+” again.

While the handset is “on-hook,” available services will be displayed on the LCD. To place a call, remove the handset from its holder and select the type of call you wish to make (“1” for a voice call). In the case of a voice call to someone on the ground, the following would be keyed: “1” + “Area Code” + “Number.” To terminate any dialing sequence and return to the main menu, press “End Call.”

Calls to the airplane may be made in three ways:

Aircraft Aircall number (assigned to the aircraft) are permanently stored by the C-2000 upon registration. The Aircraft Aircall number will ring at all handset locations.

Station Aircall numbers (assigned to each handset) are permanently stored by the C-2000 upon registration. The Station Aircall number will ring at the assigned handset location.

GTE Airfone Calling Card/"Personal" numbers (encoded into GTE Airfone Calling cards) can be used on any MagnaStar or GenStar equipped aircraft and must be registered on each flight. Up to nine GTE Airfone calling card numbers may be registered on a C-2000 equipped aircraft.

To initiate an Aircall, the ground part must dial 1-800-AIRFONE. When prompted, enter the Aircall number of the aircraft, a station handset, or of an individual traveler, then enter the callback telephone number of the ground party. To return a call to the displayed callback number, take the handset off-hook and press either "1" or "2." Pressing "1" will charge the call to the aircraft account and automatically dial the number. Pressing "2" will allow you to charge the call to a credit card; after pressing "2" wait for the tone and then swipe the card or manually input the card number.

The C-2000 has many features not included in the operating manual. For more detailed information, refer to the MagnaStar C-2000 System Digital Airborne Telephone User's Guide.

COCKPIT VOICE RECORDER (CVR) (Optional)

An FA2100 cockpit voice recorder system provides a continuous 30-minute record of all voice communications originating from the cockpit as well as sounds from warning horns and bells. The system is protected by a 5-ampere circuit breaker (CVR) located on the right circuit breaker panel.

COCKPIT VOICE RECORDER CONTROL PANEL

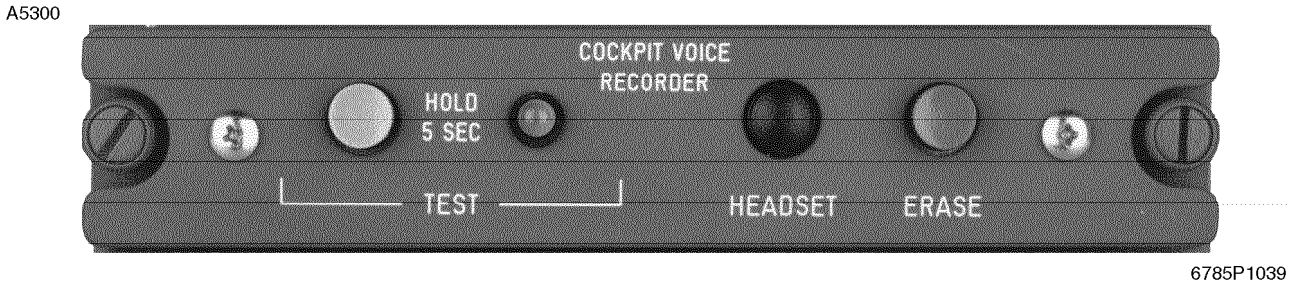

Figure 3-14

The sensitive microphone is located in the instrument panel near the lower right corner of the fire tray. The system is energized when the battery switch is in the BATT position. The control panel, located on the center pedestal, contains a TEST button, and an ERASE button. System operation is checked by pressing the TEST button. When the TEST button is held down for five seconds illumination of the green light on the control panel indicates correct functioning of the voice recorder system. Pressing the ERASE button for approximately 2 seconds will cause the entire record to be erased. Erasure can only be accomplished on the ground with the main entry door opened.

The installation is equipped with a five-G switch which will activate any time the airplane is subjected to a five-G force; this will disable the system's erasure mechanism until a reset button on the G-switch is pressed. The switch is located under the lower shelf in the forward left corner behind the forward niche panel in the tailcone baggage compartment. Access to the switch is a maintenance function, since the forward overhead panel in the baggage compartment must be removed. The ELT is also equipped with an underwater locator device which is located with the recorder mechanism in the tailcone baggage compartment.

DIGITAL FLIGHT DATA RECORDER (Parts 91 and 135)

On Citation X airplanes which are equipped with more than 9 passenger seats and are operated under FAR Part 91 or FAR Part 135, a digital flight data recorder, which continuously records at least 17 parameters of airplane and systems operation, is required. A continuous recording of 8 hours is also required. The optional flight data recorder (FDR) installed in the Citation X records the information digitally by a solid state method, and far exceeds the minimum requirements of number of parameters and recording time.

The flight data recorder system consists of a solid state flight data recorder, a G switch, and a remotely mounted accelerometer. The flight data recorder interfaces with the data acquisition unit (DAU) in order to obtain airplane system and flight data information. The accelerometer provides information to the DAU. The G switch is a power interrupt switch, which removes power from the flight data recorder, in order to prevent recording over data in an airplane mishap, if the recorder should still have power available. The flight data recorder uses a modular crash survivable memory unit (CSMU), for protection of the solid state flight data recording memory. The CSMU retains the most recent 25 hours of digital flight data and timing information. The flight data recorder may be upgraded, if desired, to a fifty-hour recorder by exchanging the CSMU.

An underwater locating device is attached to the CSMU, to aid rescue/recovery personnel with sonar type equipment in locating the CSMU. If the airplane is submerged, the underwater locater will activate within four hours.

Recorder operation begins upon airplane power-up and continues until electrical power is shut off. Recorder operation requires no attention from crew members. Continuous internal checking of the transcribed data is accomplished by the installation to ascertain that correct data is being recorded. An engine instrument and crew alerting system (EICAS) cyan textual annunciation (FDR FAIL), will appear if the flight data recorder becomes inoperative, or if a system fault is detected.

An Event Marker button is located at the far left lower part of the instrument panel. Its purpose is to mark the location in the progress of the flight of an event the pilot may wish to have recorded for later reference. The flight data recorder receives its power from the right main DC bus through a 5-ampere circuit breaker (FDR) on the right circuit breaker panel.

PRIMUS 2000 INTEGRATED AVIONICS FLIGHT CONTROL SYSTEM

The PRIMUS 2000 Integrated Avionics System is a state-of-the-art system which integrates into a unified whole systems which have been, in older technology, parts of varied and differentiated units. Its digital busses and interconnecting computer circuits provide capabilities and performance that have been unattainable in the past. It combines three subsystems into two identical interchangeable IC-800 integrated avionics computers (IACs) which are the hearts of the dual system. The subsystems are: the electronic display system, the flight guidance system, and the flight management system.

The integrated avionics system, itself, consists of the ADZ-840 air data system, the LASEREF IV Inertial Reference System (IRS), the Honeywell Traffic Collision and Avoidance System (TCAS II), the PRIMUS II integrated radio system, the PRIMUS 870 weather radar system, and the AA-300 radio altimeter system.

Systems which can be optional parts of the Citation X configuration are the LSZ-850 lightening sensor system (LSS).

The automatic flight guidance, flight management, and electronic display systems are operated through cockpit sensors, displays, and controls which direct the computers. The automatic flight guidance system (FGS) commands flight director guidance, autopilot, yaw dampers, and automatic trim (elevator and Mach trim) functions. Attitude and heading information from the AHRS and air data information from the micro air data computer are fed into the flight guidance computer in the IACs, which control the flight of the airplane and optimize performance.

A central serial wiring network, consisting of redundant buses of the avionics standard communications bus (ACSB) nomenclature, connects all the units on a bus. Left and right back-up busses connect units on their respective sides of the airplane, assuring communication redundancy. Further redundancy is assured by the integrated avionics computer in that it communicates fault isolation between the flight guidance computer, the electronic display system, and the flight management systems, keeping a fault in one area from affecting other IAC functions.

In order to avoid unnecessary redundancy, only major points concerning operation of the PRIMUS 2000 Integrated Avionics System are covered here. A more detailed discussion of the Citation installation is found in the PRIMUS 2000 Integrated Avionics Flight Control System for the Citation X, Pilot's Manual Pub. No. A28-1146-104-04 dated October 2001, or later edition, which is provided with the Citation X airplane. The Pilot's manual must be immediately available to the flight crew of Citation X airplanes.

ELECTRONIC DISPLAY SYSTEMS

The electronic display systems (EDS) display information from remote sensors concerning automatic flight control systems, flight management systems, caution and warning systems, and airplane performance. It displays this data in analog and digital form in the pilots' primary flight displays (PFDs), the multifunction displays (MFDs), and the engine indicating and crew alerting system (EICAS) display.

PRIMARY FLIGHT DISPLAY

A3922

6718P1326

Figure 3-15

Organization of the displays is as follows:

Primary flight display (PFD) - Integrates attitude, heading, air data information, and flight director modes with command bars, weather radar, and navigation information. Combines information from these disparate sources into one easily interpreted comprehensive display.

Multifunction display (MFD) - Displays heading, navigation map, weather radar, optional checklist, and optional traffic and collision avoidance system (TCAS) information.

Engine Instrument and Crew Alerting System (EICAS) - Displays engine data, flight control data, systems status data, and warning/caution/advisory/status messages.

Both the PFDs and the MFDs are equipped with bezel buttons along the lower edge of the display units (DUs). The PFDs also have a conventional slip/skid indicator attached to the bezel.

The RA/BARO button on the PFD bezels controls the bug on the altitude display for setting the minimum decision height/minimum descent altitude (BARO) or for setting the radio altitude bug for minimum radio altitude (RA). Pressing the RA/BARO button causes the MINIMUMS knob to alternate which bug it controls. The STD button on the right of the bezel, when pressed, returns the barometric setting to 29.92 in. Hg., or its metric equivalent, 1013 millibars, if metric function has been selected on the MFD bezel menu (PFD setup menu). If cross-side digital air data computer data is being displayed on a PFD, the BARO setting knob of that display will be inoperative; also when a reversionary mode is selected on a PFD, the menu item keys on the selected PFD are inoperative.

Certain of the display formats of the PFDs and the MFDs are controlled by the DC-840 display controller. Other MFD and PFD displays are controlled by the bezel controller buttons located in the MFD and the PFD bezels. Pressing the MFD bezel buttons selects menus, which present selectable parameters, or, in some cases, selects submenus which will in turn present further selectable parameters. The menus/parameters are sufficiently identified so as to make their function self evident. The "top" menu, which is the default menu, is menu one; pressing the < button selects the succeeding menu, and further pressing brings back the original menu page.

The rotary knob on the bottom right of the MFD bezel is used to control the range selection of the map or plan display on the MFD in preset increments. Some menu selection buttons can change the knob function so that it can set flight parameters. When the weather radar is selected for display, the WC-840 weather radar controller has precedence and will control the range.

DC-840 DISPLAY CONTROLLER

The DC-840 display controller selects formats for the primary flight displays (PFDs), multifunction displays (MFDs), and the engine indicating and crew alerting system (EICAS). It controls navigation format control for both the PFD and the MFD, controls the weather presentation on the PFD and the MFD, and the optional traffic and collision avoidance system (TCAS) presentation, also on both the MFD and PFD. It also controls whether or not the EICAS display is presented on the MFD. The lower part of the controller is dedicated primarily to operation of the optional checklist installation.

DC-840 DISPLAY CONTROLLER

A5308

6785P1021

Figure 3-16

NAVIGATION PRESENTATION

PFD/HSI Button - Pressing the PFD/HSI button toggles the PFD display between the full and partial compass display. The full compass display shows the entire compass rose; the partial display shows a segment 120 degrees wide, with the airplane heading in the middle. The default display at power up is full compass. The MFD range knob controls the MFD range selections unless weather radar is being displayed, in which case the range markers are controlled by the weather radar controller.

PFD/WX Button - Pressing the PFD/WX button displays weather on the arc display. Range control reverts to the radar weather controller.

ET Button - Alternately pressing the ET button selects or removes the elapsed time (ET) clock display from the MFD. The same button also starts, stops, and resets the timer. The power-up default is with the clock not displayed. When the timer, if displayed, experiences no activity for 10 minutes, or if the ET button is pressed for 2 seconds, the timer will disappear from the display. The timer can count from zero forward or from a preset value back to zero. Counting from zero is started by pressing the ET button. Counting from a preset value back to zero is started by the ET button after the preset value has been entered in the display. The MAIN 1 menu select key is used to enter the mode for setting preset values.

TCAS Button (Optional) - Pressing the TCAS button displays TCAS information in the MFD zoom window. If the TCAS button is pressed when the MFD is in the map mode, the map mode remains. The MFD window can be toggled between the checklist, systems, or TCAS displays. If TCAS is displayed in the MFD window, and if TCAS traffic is selected for display on the MFD map the TCAS traffic is removed from the map display.

ACFT/SYS Button - Pressing the ACFT SYS button displays the system status in the system pages section of the center display. If the EICAS SYS menu is selected the system is shown boxed on the display. Pressing the ACFT SYS button will sequence through the EICAS system displays, starting at the last display selected. If no displays were selected since start-up, the sequence starts with the normal checklist. The EICAS menu select keys can be used to select an EICAS display in any sequence. Using the ACFT SYS button, the toggling sequence for EICAS systems displays is as follows: NORM, FUEL/HYD, ELEC, CTRL POS, ENG (standard), DCLT, NORM.

MFD/MAP Button - Pressing the MFD/MAP button toggles the MFD between the heading-up (MAP) and north-up (PLAN) displays. The default power-up display is MAP. If weather is selected in MAP function, the display will include it. When weather is displayed the radar control will control the range markers. If TCAS is selected for display and PLAN display is selected, TCAS will be removed from the display. If TCAS is selected in the MFD "zoom" window it will not be displayed on the MAP display.

MFD/WX Button - Pressing the MFD/WX button displays weather in conjunction with the MAP mode. Range control is by the radar weather controller. When weather is selected it replaces the plan display, TCAS and checklist displays are not affected by selection of weather.

The lower section of the DC-840 display controller is used in conjunction with the flight management system (FMS), or with the optional electronic checklist. The below following discussions concern these functions. When used with the FMS, the lower pushbuttons and the "joystick" control the position designator and are referred to as designator controls. When used with the checklist, they become checklist controls.

DESIGNATOR CONTROL

SKP Button - Pressing the skip button skips the designator's home position to the next displayed waypoint. When pressed with the designator at the last displayed waypoint, the designator returns to the present position.

RCL Button - In the map mode, when the designator is not at its referenced waypoint, pressing the RCL (recall) button moves the designator to the referenced waypoint. If the referenced waypoint was the aircraft, pressing RCL moves the designator to the aircraft’s present position. If the system is in the plan mode, pressing RCL returns the designator to the referenced waypoint.

ENT Button - When the designator is offset from its home position or a waypoint, pressing the ENT button transmits the LAT/LON of the designator to the FMS scratchpad as a requested waypoint.

Joystick - The joystick is used for four-direction control of the designator: up, down, left, and right on the map display. The course and distance to the designator from its home position is displayed in the lower right corner of the display. When the plan display is being used, the joystick moves the north-up viewing circle so the pilot can see the desired track line. Changing display formats resets the designator to its home position on the map format. When the checklist is selected in the MFD zoom window, the joystick on the selected side is the only control that can be used to operate the checklist. The cross-side joystick can, however, be used to control the map designator on the cross-side MFD.

CHECKLIST PRESENTATION

Checklists can only be displayed one at a time on the MFD. When one pilot selects a checklist for display using the display controller, the cross-side controller checklist selections are ignored by the system. When the pilot who selected the checklist deselects the checklist, the cross-side controller becomes operable.

NOTE

- if a partially completed checklist is deselected by one pilot and then reselected using the other side controller, the reselected checklist displayed will indicate that none of the checklist steps have been completed. Partially completed checklists are not retained in memory.

- If either pilot has SG REV selected, and if either pilot then selects a checklist function, the system places the checklist on both MFDs. The system recognizes an SG (symbol generator) failure has occurred and presents identical displays on both display units.

The SKP, RCL, PAG, and ENT buttons, and the joystick can be used to control the checklist designator. Selecting another checklist button, airplane systems display, or TCAS overrides the existing checklist display. The descriptions below describe how checklist control functions are used to operate the checklist.

NORM (Normal) Button - When the NORM button is pressed, the system displays the MFD's normal checklist display. The normal checklist is arranged in the order of standard flight operations. Pressing the button displays the normal checklist index page.

ABN (Abnormal) Button - When the ABN button is pressed, the system displays the MFD’s abnormal checklist. Pressing the ABN button displays the abnormal procedures index from which a selection can be made.

EMER (Emergency) Button - When the EMER button is pressed, the system displays the MFD’s abnormal and emergency checklist displays. Pressing the EMER button displays the index from which a procedure cand be selected.

SKP (Skip) Button - When the SKP button is pressed the active selection skips to the next item. If the item skipped is the last item on the checklist, the active selection is the lowest order skipped item on the checklist.

RCL (Recall) Button - Pressing the RCL button displays the page that contains the lowest order skipped item with the active selection being at that item.

PAG (Page) Button - Pressing the PAG button advances the checklist to its next page. The active selection is the lowest order incomplete item on the new page. If there are no incomplete items on the new page, the active selection is the first item on the page.

ENT (Enter) Button - Operation of the ENT button is dependent upon the following two criteria:

Index Page - When the ENT button is pressed on an index page, the checklist which corresponds to the active index line selection is displayed. The checklist is displayed at the page that contains the lowest order incomplete item with the active selection at that item.

If the checklist has been completed, the system forces all items on the checklist to be incomplete and displays the first page of the checklist with the active selection at the first item.

Checklist Page - On a checklist page, the ENT button is pressed when an item has been completed. When the ENT button is pressed, the system designates the active item as completed, and advances to the next incomplete item. If ENT is pressed with the active selection at the last item in a checklist, the operation depends on whether the checklist is completed or not. If the checklist is not complete (one or more items skipped), the system displays the page that contains the lowest order incomplete item with the active selection at that item.

Joystick - The joystick is used to control paging and the cursor. Control is dependent on the direction the joystick is moved; up arrow moves the active selection to the lower order item, down arrow moves the active selection to the next higher order item (identical to the SKP button), left arrow displays the previous page, right arrow displays the next page (identical to PAG button). When the joystick is displayed in the MFD window, the joystick on the displayed side is the only one that can be used to control the checklist.

SC-840 SOURCE CONTROLLER

The SC-840 source controller is used to select the bearing pointer display, and the navigation sources used by the system. Some navigation sources can be previewed when they are selected with the source controller. The source controller transmits data to its on-side DC-840 display controller. The PFD and the MFD can each display two independent bearing pointers, O and ◇ , which are selected by the respective bearing (BRG) knobs; BRG O and BRG ◇ . The selectable bearing sources for each pointer are as follows: BRG O selects OFF, VOR 1, ADF 1, and FMS 1. BRG ◇ selects OFF, VOR 2, ADF 2, and FMS 2. Selections are annunciated in appropriate colors (matching the pointer colors) in the lower left side of the PFD display. Push button switch functions on the source controller are described below.

SC-840 SOURCE CONTROLLER

A5302

6785P1040

Figure 3-17

NAV Button - Pressing the NAV button toggles between the on-side and cross-side VOR/ILS navigation source. Default power-up selection is the on-side VOR/ILS source.

FMS Button - Pressing the FMS button toggles between FMS number one and FMS number two. At power-up there is no FMS selection by the system.

PRE Button - When the FMS (one or two) is selected for display, pressing the PRE button displays the respective navigation source (VOR or LOC) in the preview format, i.e., the tuned VOR (on-side) station or ILS will be shown as a white course deviation indicator (CDI), in addition to the FMS course guidance. Pressing the button again will remove the additional display. Toggling the PRE button alternates between the on-side and the cross-side navigation sources.

RI-871 INSTRUMENT REMOTE CONTROLLER

Using the RI-871 instrument remote controllers the pilot and copilot can independently select course and heading data for display and for flight director use. The copilot can, in addition, on the right-side controller input the selected altitude for the altitude select (ALT SEL) feature of the flight guidance system. The two controllers are identical except that the pilot's controller does not have the ALT SEL knob in the center of the panel.

RI-871 INSTRUMENT REMOTE CONTROLLER

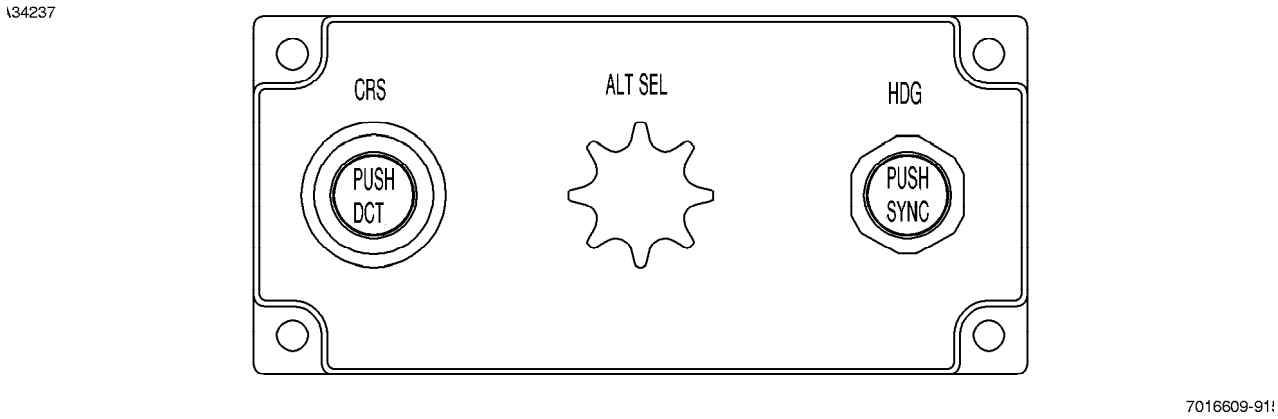

Figure 3-18

CRS Button - The CRS button is used to select the desired course when in VOR/ILS navigation mode. When in FMS or the optional MLS modes the navigation sources automatically select the proper course. When navigation using a VOR source, pressing the PUSH DCT button centers the course pointer for a direct course to the active VOR station.

HDG Button - Depending on the position of the HDG selector on the GC-810 flight guidance controller this button displays and selects the position of either the heading bug or the optional inertial reference system (IRS) track bug. Pressing the PUSH SYNC button synchronizes either the heading or track bug (as selected) to either the current aircraft heading or IRS track.

ALT SEL Knob (Copilot only) - The ALT SEL (altitude select) knob is used to set the altitude preselect on both primary flight displays (PFDs). When turned at a rate of one click at a time, each click adds or subtracts value. When the knob is turned quickly, the altitude preselect data changes in larger increments. Clockwise rotation increases the preselect value; counterclockwise rotation decreases it.

FLIGHT GUIDANCE

GC-810 FLIGHT GUIDANCE CONTROLLER

The GC-810 flight guidance controller is used to engage or disengage the autopilot and yaw damper and to select the flight director modes of operation. It also selects whether the left or right air data computer (ADC) and left or right horizontal situation indicator (HSI) displayed data are used for supplying information to the flight guidance system. A pitch trim wheel is located on the controller; it can be used to control the airplane pitch attitude through the autopilot, when an automatic pitch mode is not selected. There is also a redundant pitch trim wheel, which is more convenient to the pilot, located near the throttles on the left side of the center pedestal.

When the autopilot and yaw damper are selected they are annunciated on the controller and on the PFD. If only the yaw damper (YD) is engaged, the YD is annunciated on the controller but there is no primary flight display (PFD) annunciation. The yaw damper is normally engaged at all times, to provide yaw stability augmentation. It senses rudder pedal inputs and does not "feed back" against them; it cannot be intentionally disengaged but may, in case of momentary disengagement caused by system malfunction, be re-engaged by the YD switch on the GC-810 controller if the malfunction is cleared. Flight director modes and the HSI source for the flight guidance system are also annunciated on the controller and the PFD. The function of each switch on the controller is discussed in the below paragraphs. All references to the automatic flight control system (AFCS) are references to the flight guidance system (FGS) as well.

GC-810 FLIGHT GUIDANCE CONTROLLER

A5309

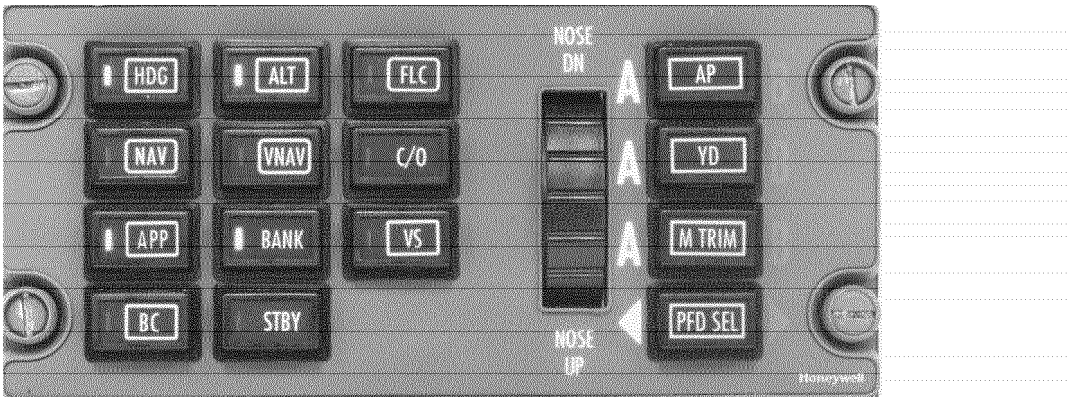

6785P104

Figure 3-19

FLIGHT DIRECTOR FUNCTIONS

HDG (Heading) - The HDG button commands the flight guidance computer (FGC) to follow the inputs from the heading bug on the selected HSI. Pressing HDG causes the command bars on the primary flight display (PFD) to follow the position of the heading bug. A lower bank limit can be selected, while in heading mode, by pressing the BANK button on the controller.

NAV (Navigation) - Pressing the NAV button causes the flight guidance computer to arm, capture, and track the selected navigation signal sources; VOR (VHF omni-range), LOC (ILS localizer), AZ (MLS azimuth) (optional), or LNAV (long range navigation).

APP (Approach) - Pressing the APP button generates the proper system gains to meet approach criteria in order to enable the system to arm and capture the lateral deviation signals for VOR, LOC, and AZ, and to arm and capture both lateral and vertical navigation signals for the ILS and the optional MLS systems.

BC (Back Course) - Pressing the BC button commands the flight director computer to track the localizer back course. For a back course approach, the published front course should be set into the horizontal situation indicator (HSI) so that the flight director computer will compute properly.

ALT (Altitude Hold) - When the ALT button is pressed, it commands the system to hold the present altitude.

VNAV (Vertical Navigation) - Pressing the VNAV button causes the system to follow the vertical path guidance from the selected FMS.

BANK - Pressing the BANK button causes the guidance computer to reduce the bank angle to 17° when in HDG mode. An automatic bank angle change occurs at 34,275 feet mean sea level (MSL). During a climb the bank angle is reduced; during descent it returns to the full bank value.

STBY (Standby) - Pressing the STBY button cancels all of the flight director modes. If engaged, the autopilot will remain engaged in the basic pitch and roll hold modes.

FLC (Flight Level Change) - When the FLC button is pressed, the system maintains the current indicated airspeed or permits a new indicated airspeed to be selected and maintained, using either of the two autopilot PITCH wheels, or the touch control steering (TCS) button on the control wheels. The indicated airspeed target is displayed on the PFD. FLC is also used with the flight management system (FMS) VNAV to maintain an FMS supplied speed target.

C/O (Changeover) - The guidance controller C/O button is an indicated airspeed (IAS)/Mach changeover button. Pressing the button toggles selection between IAS and Mach.

VS (Vertical Speed) - Pressing the VS button causes the system to maintain the current vertical speed, or a new vertical speed can be selected and maintained by using either pitch wheel or by pressing and holding the TCS button. The vertical speed target will be displayed on the PFD.

AUTOPILOT FUNCTIONS

AP (Autopilot) - Pressing the AP button simultaneously engages the autopilot and yaw damper; it disengages only the autopilot.

YD (Yaw Damper) - The YD button engages the yaw damper only. It will not disengage the yaw damper.

The active FGS is annunciated by the illuminated A or B indicators located on either side of the AP and YD buttons. When the autopilot and yaw damper are in a normal no-failure condition, the number one (A) flight guidance system (FGS) is automatically selected as active and the A annunciator is illuminated. The pilot may select the right FGS system as active by selecting it by means of the bezel controller on the multifunction display, through the MAIN 2 menu. Engagement of the number two FGS is indicated by illumination of the B annunciator by the AP and YD buttons.

M TRIM (Mach Trim) - Pressing the M TRIM button engages the horizontal stabilizer automatic trim, when the autopilot is not engaged. Upon power-up the Mach trim automatically engages. Turning M TRIM off has no effect on the yaw damper or the autopilot. The illuminated A or B annunciates which FGS is supplying the M TRIM function.

HSI SEL (PFD Select) - Pressing the HSI SEL button alternately selects data from either the pilot's or copilot's HSI and micro-air data computer (MADC) for lateral and vertical guidance to the active FGS. Upon power-up, data from the pilot's micro-air data computer and HSI are automatically selected. When a cross-side system is selected all flight director modes will cancel, and will have to be reselected, if desired. The pointer on the right or left side of the HSI SEL button lights to annunciate which HSI and MADC have been selected. The status of the flight director modes (ARM or CAP [CAPTURE]) is annunciated only on the PFD. A green arrow at the top of attitude director indicator (ADI) display in the PFD points to the left or right in order to indicate which flight guidance computer (FGC) is in control.

PITCH Wheel - The AUTOPILOT TRIM (NOSE UP/NOSE DOWN) pitch wheel is used primarily to set an airspeed or a vertical speed target on the PFD; then when the FLC (flight level change) or VS (vertical speed) modes are selected, the command bars will command a path to capture and hold the selected values. The PITCH wheel can also be used to control the airplane in pitch, with only the basic autopilot modes (pitch and roll hold) engaged. When both pitch wheels are moved at the same time, the inputs are cancelled.

Autopilot Disengage - The autopilot is normally disengaged by pressing the AP disconnect button on the outboard side of each control wheel. It can also be disengaged by any of the following methods: Pressing the AP or YD button on the GC-810 flight guidance controller, pressing the go-around button located on the throttle levers, selecting AOA (angle-of-attack) or FLAP (flap test) on the cockpit rotary TEST switch, or operating the pilot's or copilot's elevator trim switch.

The airplane primary elevator trim system is monitored and engaged by the automatic flight control system (AFCS); if the trim system becomes invalid the autopilot will disengage. When the integrated avionics computer (IAC) 1 or SERVO 1 circuit breakers are pulled, the system transfers to flight guidance computer (FGC) number two if FGC number one was the system in control. The autopilot will remain engaged.

For normal operations the autopilot cannot be engaged on the ground.

FLIGHT GUIDANCE SYSTEM CAUTION/ADVISORY/STATUS MESSAGES

Flight guidance system related messages are displayed by the engine indicating and crew alerting (EICAS) system. Flight guidance system associated messages are listed below. CAUTION messages are amber, ADVISORY messages are cyan and STATUS messages are WHITE. The flight guidance system has no red messages.

MESSAGE	DESCRIPTION
AP STAB TRIM INOP (AMBER) *	The AP is engaged and the FGC has detected an AP trim failure. The pilot should disengage the AP manually with his hands on the control column.
FGC A-B FAIL (AMBER) *	This message is displayed when there is a failure of AP, manual or Mach trim on the annunciated FGC, or loss of lower yaw damper.
FLIGHT CONTROL FAULT (AMBER) *	PCU-PCU force fight or any control switch depressed. Do not unload hydraulic system.
RAT PROBE FAIL L-R (AMBER) *	If both RAT probes unavailable there will be no TAS, therefore AP will disengage due to miscompare. **
FGC-ADC MISCMP (CYAN)	This message is displayed when ADC 1 and 2 data to the FGC do not agree. FD/AP mode drops or will not engage.
FGC- ATT MISCMP (CYAN)	This message is displayed for 5 seconds if the crew's attempt to engage the AP is unsuccessful due to an IRS split.
RAT PROBE FAIL L-R (CYAN)	If RAT is unavailable there will be no TAS, therefore AP will disengage due to miscompare. **
FGC A-B MASTER (WHITE)	Annunciates which FGC is driving the servos in response to manual or auto transfer. Will clear after five seconds.

* Audible warning chime will sound.
** A unique autopilot off tone will sound.

FLIGHT GUIDANCE SYSTEM POWER-UP TEST

When the flight guidance is powered-up it accomplishes a system self-test, which takes approximately 30 seconds to complete. When the test is completed, the white FGC A MASTER status message will be displayed for five seconds. If failure is detected in either FGC, the blue advisory message FGC A-B FAIL will be displayed. A failure in the flight guidance computer that prevents operation of the flight director function will be annunciated with a red FD FAIL on the PFD.

MODES OF OPERATION

System operation is explained below in a series of steps. Explanation of the terms used is found in the preceding sections in which operation of the various control panels, through which control of the modes is effected, is discussed and in this section where operation of the modes is discussed. Operation of the system is discussed in greater detail in the PRIMUS 2000 Integrated Avionics Flight Control system for the Citation X, Pilot's Manual, which is provided with the airplane.

AUTOPILOT BASIC MODES

Heading Hold Mode

The basic lateral mode of the autopilot is heading hold. It is not annunciated. The autopilot is considered to be in heading hold mode when the autopilot is engaged, no lateral flight director mode is selected, and the bank angle is less than 6 degrees. When the preceding conditions are satisfied and the autopilot is engaged, it will roll the airplane wings level and hold that attitude. When the bank angle is less than three degrees plus ten seconds, the heading hold mode is automatically engaged.

Pitch Hold Mode

The pitch hold mode is the basic autopilot (AP) and flight director (FD) vertical mode. There is no PFD annunciation of pitch hold. The mode is best described by discussing its operation with autopilot engaged and without autopilot engaged. The below discussion assumers that the single cue operation has been selected. If the cross pointer command cue is selected and only a vertical mode is selected, the pitch command cue can be in view without the roll command cue being in view.

Pitch Hold Mode with Autopilot Engaged

If no vertical modes are active, the autopilot holds the pitch attitude that exists when the AP is engaged. The FD pitch command bar is in view on the coupled PFD only if a lateral FD mode is active. Also, if no vertical modes are active, the pitch attitude reference can be changed by pushing and holding the touch control steering button on the control wheel and changing the aircraft's pitch attitude using the control column. The AP will retain the pitch attitude that exists when the TCS button is released. If only a lateral FD mode is active, the FD pitch command bar is in view on the coupled PFD.

An easy way to change the pitch attitude is by using the PITCH wheel located on either the GC-810 flight guidance controller, or the remote one on the center pedestal. Use of the pitch wheel is inhibited in the modes of flight level change (FLC), vertical flight level change (VFLC), vertical path (VPTH), vertical altitude hold (VALT), and approach (APP) modes. It can be used when no FD vertical modes are active or in the altitude hold (ALT) mode; movement of the pitch wheel will cancel the ALT mode.

Pitch Hold Mode with Autopilot Not Engaged.

When a FD lateral mode with no active FD vertical mode is selected, the command bar will be displayed (assuming the single cue command bar is being used). This command represents the airplane pitch attitude when the FD lateral mode is selected. The reference can be changed by pushing the TCS button to synchronize the pitch command to the current aircraft attitude.

The pitch hold mode is automatically cancelled by selecting an FD vertical mode.

Roll Hold Mode

The roll hold mode can be engaged and the maneuvered bank angle held under the following conditions: (1) no lateral FD mode is selected, (2) the bank angle is greater than 6° but less than 35°, and (3) the touch control steering (TCS) was used to initiate the roll maneuver, with the autopilot engaged.

When the TCS button is released at bank angles greater than 35°, the autopilot will roll the airplane to a bank of 35° and maintain it. Any time the TCS button is used, the AP engage annunciation on the GC-810 flight guidance controller extinguishes and the PFD annunciates TCS. There is no roll hold annunciation.

Heading Select Mode

The heading select mode is used to intercept and maintain a selected heading. Selecting heading select mode resets all previously selected lateral modes. When the heading bug is set, the flight guidance computer (FGC) receives an error signal that amounts to the difference in the selected and current heading. The FGC then generates a roll command to intercept and maintain the selected heading.

To select the mode: (1) select the primary flight display (PFD) for display, by pressing the HSI SEL button on the GC-810 guidance controller (this also selects the same flight director side for guidance), (2) position the heading bug on the on-side HSI using the HDG knob on the respective RI-871 instrument remote controller, and (3) press the HDG button on the GC-810 flight guidance controller. The PFD will annunciate HDG in green and will display flight director steering commands to intercept and hold the selected heading.

Heading select mode can be cancelled by any of the following: (1) by pressing the HDG button on the GC-810 flight guidance controller, (2) by selecting go-around mode, (3) by the automatic capture of any other selected lateral mode, (4) by selecting symbol generator (SG) reversionary status (if it is on the active side), or (5) by coupling to the cross-side HSI with the flight guidance controller HSI SEL button.

VOR (NAV) Mode

The VOR mode uses the navigation source displayed on the coupled side PFD to intercept, capture, and track a selected VOR radial. To set up and capture a VOR radial using the VOR mode, accomplish the following: (1) press the HSI SEL button on the GC-810 guidance controller to select the desired side (< or >) for guidance, (2) select NAV 1 or NAV 2 by pressing the left or right NAV button on the on-side SC-840 source controller, (3) tune the NAV receiver to the correct VOR frequency, (4) set the desired course on the on-side RI-871 instrument remote controller and set the heading bug to intercept the course, and (5) press the NAV button on the GC-810 guidance controller to engage the mode. VOR armed and heading select modes will be automatically selected to intercept the beam; VOR will be annunciated in white and HDG in green on the PFD to indicate this.

When the course pointer on the PFD is set, a course select error signal is established which represents the difference between the present airplane heading and the desired course. This error signal is sent from the electronic flight instrument system (EFIS) to the flight guidance system (FGC) in the IC-800 integrated avionics computer (IAC). An intercept of 45° or less will result in a faster intercept; otherwise the system may make up to two heading changes to accomplish course intercept.

When the airplane reaches the lateral beam sensor trip point, heading select will be cancelled and the VOR radial will be captured. This is annunciated by the HDG message disappearing and the white VOR message changing to green, being asterisked, and flashing for five seconds. The flight guidance computer will roll the airplane onto the radial and track it to the station. As the airplane approaches the station it enters a zone of confusion, or unstable radio signals, caused by the shape of the radiated signal from the station. When the signals are sensed to be erratic an over station monitor system (OSS) removes the radio deviation from the roll command until the signal becomes stable again on the other side of the station. When the OSS system is controlling the roll function, the mode annunciation will be *VOR. After station passage there is an after over station sensor (AOSS) which commands the roll mode until a clear signal is received. During this time the annunciation is also *VOR.

Performing any of the following actions will cancel the VOR mode: (1) Pressing the NAV button on the GC-810 flight guidance controller, (2) selecting the heading select (HDG) mode, (3) changing NAV sources on the SC-840 source controller, (4) selecting go-around mode, (5) pressing the HSI SEL button to couple to the cross-side HSI, and (6) deselecting an SG reversionary selection.

VOR Approach Mode

The VOR approach mode uses the navigation source displayed on the coupled side PFD to intercept, capture, and track a selected VOR radial, when using the VOR for an instrument approach procedure. VOR APP mode is similar to the VOR mode above, except it changes selected gains in the flight guidance system to improve system performance in the approach mode. To set up and capture a VOR radial using the VOR approach (VOR APP) mode, accomplish the following: (1) press the HSI SEL button on the GC-810 guidance controller to select the desired side (< or >) for guidance, (2) select NAV 1 or NAV 2 by pressing the NAV button on the on-side SC-840 source controller (NAV 1, NAV 2, NAV 1 progression, etc.), (3) tune the NAV receiver to the correct VOR frequency, (4) set the desired course on the on-side RI-871 instrument remote controller and set the heading bug to intercept the course, (5) and press the APP button on the GC-810 guidance controller to engage the mode. VOR armed and heading select modes will be automatically selected to intercept the beam; VOR APP mode will be annunciated by a white VOR and HDG in green on the PFD to indicate this. The VOR annunciation will turn green when capture occurs. The minimum descent altitude (MDA) should be set on the bug on the PFD altitude tape, and the radio altitude bug may be set as desired.

The VOR APP mode can be cancelled by pressing the APP button on the GC-810 flight guidance controller, or by making any of the selections under VOR Mode above, which result in the cancelling of that mode.

Long Range Navigation

To fly the airplane guided by course(s) programmed into the flight management system (FMS), the following sequence is followed: (1) press the HSI SEL button on the GC-810 flight guidance controller (in order to select which flight director will follow the FMS guidance - the on-side PFD will display the commands), (2) press the FMS button on the SC-840 source controller, (3) verify that the FMS flight plan active leg is correct by displaying it on the MFD (use the MFD MAP button for ARC or Plan views), (3) set the heading bug to the proper intercept angle, and (4) press the NAV button on the GC-810 flight guidance panel to engage the mode. If the airplane position is outside the capture window when the NAV button is pressed, the PFD will display a white FMS annunciation, indicating that the FMS is armed; heading select mode will be automatically selected to accomplish course interception.

When the NAV button on the mode selector is pressed, LNAV is annunciated on the PFD. Depending on the position of the airplane in relation to the desired course, the FGS may first arm and then capture the long range nav mode (LNAV). Annunciation of LNAV in white on the PFD indicates the mode is armed, when the annunciation changes to green, it indicates that capture has occurred. Once capture has occurred the system will compute a desired track to intercept.

The LNAV mode is cancelled by any of the following actions: (1) pressing the NAV button on the GC-810 flight guidance controller, (2) selecting go-around mode, (3) selecting another navigation source on the SC-840 source controller, (4) selecting the heading select mode, (5) coupling to the cross-side HSI with the HSI SEL button, (6) deselecting an SG reversionary selection.

Localizer (NAV) Mode

The localizer mode will automatically intercept, capture, and track a front course localizer beam, lining up the airplane with the center line of the runway in preparation for landing.

To accomplish the automatic interception and tracking of the ILS localizer, accomplish the following: (1) press the HSI SEL button on the GC-810 flight guidance controller to couple the flight guidance computer to the desired side. An arrow (< >) will illuminate indicating which side has control. (2) Select NAV 1 or NAV 2 on the DC-840 source controller NAV button on the selected side, (3) tune the selected NAV receiver to the proper localizer frequency, (4) set the localizer in-bound course on the on-side PFD by rotating the course knob on the respective RI-871 instrument remote controller, (5) set the heading bug to the beam intercept angle, (6) set the radio altitude MDA and the barometric minimum descent altitude using the PFD RA/BARO button and the minimums knob, (7) press the NAV button on the GC-810 flight guidance controller to engage the mode. LOC armed and HDG select modes will be automatically selected if the beam deviation is outside the LOC capture range (which is approximately more than one dot deviation). The PFD will display LOC in white to indicate that the mode is armed; HDG in green will be indicated in the PFD until capture occurs. At capture the green HDG and white LOC will extinguish and a green LOC message will appear and flash for five seconds.

The localizer mode will be cancelled by any of the following actions: (1) pressing the NAV button on the GC-810 flight guidance controller, (2) selecting go-around mode, (3) selecting heading select mode, (4) selecting back course mode, (5) changing NAV sources, (6) deselecting an SG reversionary selection.

Back Course Mode

The back course mode will automatically intercept, capture, and track a back course localizer beam, lining up the airplane with the center line of the runway in preparation for landing.

To accomplish the automatic interception and tracking of the ILS localizer back course, accomplish the following: (1) press the HSI SEL button on the GC-810 flight guidance controller to couple the flight guidance computer to the desired side. An arrow (< >) will illuminate indicating which side has control. (2) Select NAV 1 or NAV 2 on the DC-840 source controller NAV button on the selected side, (3) tune the selected NAV receiver to the proper localizer frequency, (4) set the localizer in-bound course (that corresponds to the front course) on the on-side PFD by rotating the course knob on the respective RI-871 instrument remote controller,

(5) set the heading bug to the beam intercept angle, (6) set the radio altitude MDA and the barometric minimum descent altitude using the PFD RA/BARO button and the minimums knob, (7) press the BC button on the GC-810 flight guidance controller to engage the mode. BC armed and HDG select modes will be automatically selected if the beam deviation is outside the capture range (which is more than approximately one dot deviation). The PFD will display BC in white to indicate that the back course mode is armed; HDG in green will be indicated in the PFD until capture occurs. At capture the green HDG and white BC will extinguish and a green BC message will appear and flash for five seconds.

When the back course mode is selected on the flight guidance controller, logic in the flight guidance system is established to internally reverse the polarity of the course error and localizer signals, and a gain is introduced to account for the fact that the localizer antenna is closer to the airplane by the length of the runway plus 1000 feet.

The back course mode will be cancelled by any of the following actions: (1) pressing the BC button on the GC-810 flight guidance controller, (2) selecting heading select or go-around mode, (3) selecting APP mode, (4) changing NAV sources, (5) deselecting an SG reversionary selection, (6) coupling to the cross-side HSI with the flight guidance controller HSI SEL button.

Preview and Transition

Preview is a feature that can be displayed after capture of FMS mode has been accomplished on the SC-840 source controller. Pressing the PRE button activates an additional white course deviation indicator in order to preview the position of the airplane in regard to a potential approach course. When the PRE button is pressed, activating the preview function, the flight guidance system will automatically transition to the previewed mode when the capture parameters are met. Procedures to preview and accomplish capture of the previewed mode are as follows: (1) verify the navigation source to be previewed is operative and press the PRE button, (2) set the applicable approach course into the EHSI with the RI-871 remote instrument controller, (3) press the APP button on the GC-810 flight guidance controller; the next steps will automatically occur in the following stages: (1) the PFD will annunciate the FD arm modes that apply to the previewed source, and transition will arm, (2) the FGS will track the FMS until the previewed source lateral deviation reaches its capture value, resulting in capture of the preview mode, (3) at capture the FGS will automatically replace the FMS with the previewed NAV source (VOR or ILS) and will capture and track the lateral signal, (4) the FGS will capture the ILS or MLS glideslope at its intercept point, and the approach will be completed in accordance with regular procedures for the particular approach.

If FMS VNAV (either vertical flight level change [VFLC] or vertical flight path [VPTH]) was in use before the transition capture, the FGC will transition to the pitch hold mode, and no vertical mode will be captured. If FMS VALT was being used before the transition capture, the FGC will transition to the ALT mode.

Instrument Landing System (ILS) Approach Mode

The ILS mode will automatically intercept, capture, and track a front course localizer beam and glideslope beam, lining up the airplane with the center line of the runway, on the glideslope, in preparation for landing. With this system the pilot can fly a fully coupled ILS approach to minimums. The glideslope will not capture until localizer capture has been effected.

To accomplish the automatic interception and tracking of the ILS localizer and glideslope, accomplish the following: (1) press the HSI SEL button on the GC-810 flight guidance controller to couple the flight guidance computer to the desired side. An arrow (< >) will illuminate indicating which side has control. (2) Select NAV 1 or NAV 2 on the SC-840 source controller NAV button on the selected side, (3) tune the selected NAV receiver to the proper localizer frequency, (4) set the localizer inbound course on the on-side PFD by rotating the course knob on the respective RI-871 instrument remote controller, (5) set the heading bug to the beam intercept angle, (6) set the radio altitude MDA and the barometric minimum descent altitude using the PFD RA/BARO button and the minimums knob, (7) press the APP button on the GC-810 flight guidance controller to engage the mode. LOC armed and HDG select modes will be automatically selected if the beam deviation is outside the LOC capture range (which is approximately more than one dot deviation). The PFD will display LOC in white to indicate that the mode is armed; HDG in green will be indicated in the PFD until capture occurs. At capture the green HDG and white LOC will extinguish and a green LOC message will appear and flash for five seconds. When the glideslope captures, any other vertical mode in use will be dropped, and GS will be annunciated in green (upon capture it will flash for five seconds).

The ILS approach mode will be cancelled by any of the following actions: (1) pressing the NAV or APP buttons on the GC-810 flight guidance controller, (2) selecting go-around mode, (3) selecting any other lateral or vertical mode on the GC-810 flight guidance controller, (4) changing NAV sources, (5) coupling to the cross-side HSI by pressing the HSI SEL button on the GC-810 flight guidance controller, (6) deselecting an SG reversionary selection.

Microwave Landing System (MLS) Approach Mode

An MLS approach is performed in a similar manner to an ILS approach. The MLS mode will automatically intercept, capture, and track the azimuth and glide path beams of a microwave landing system, lining up the airplane with the center line of the runway, on the glide path, in preparation for landing. With this system the pilot can fly a fully coupled MLS approach to minimums. The glide path will not capture until azimuth capture has been effected.

To accomplish the automatic interception and tracking of the MLS azimuth and glide path, accomplish the following: (1) tune the MLS receiver to the correct channel, (2) verify the correct inbound course on the MLS controller. The MLS receiver automatically slews the HSI course pointer or the pilot can set the course manually, (3) press the NAV button on the SC-840 source controller to select MLS for navigation, (4) verify that the PFD displays the correct course, (5) set the heading bug on the PFD to perform the intercept, (6) press the APP button on the GC-810 flight guidance controller to engage the mode. AZ/GP (azimuth/glide path) function will be armed and heading select mode is selected to accomplish interception if the airplane is outside the AZ capture parameters. The PFD will display AZ/GP armed by showing a white AZ and GP.

The MLS approach mode will be cancelled by any of the following actions: (1) pressing the NAV or APP buttons on the GC-810 flight guidance controller, (2) selecting go-around mode, (3) selecting any other lateral or vertical mode on the GC-810 flight guidance controller, (5) changing NAV sources, (6) coupling to the cross-side HSI by pressing the HSI SEL button on the GC-810 flight guidance controller, (7) deselecting an SG reversionary selection.

Azimuth must be captured before the glide path can be captured. With an MLS system, azimuth only approaches can be flown just as localizer only approaches can be flown on an ILS.

Dual Couple Approach Mode

When both NAV receivers are tuned to the same ILS approach frequency, the system uses the landing flight path information from both left and right PFDs. The dual phase uses fail-operational sensor performance with sensor redundancy management for the safety critical segment of the approach. This flight segment is initiated automatically by the system. To set up a dual coupled approach perform the following: (1) tune both receivers to the ILS frequency for the approach runway, (2) set the selected course on both PFDs. When both the localizer and the glideslope signals are on track, the radio altitude is below 1200 feet, and both NAV receivers are valid, the system transitions to the dual HSI mode of operation. When this mode is active, both HSI SEL arrows on the GC-810 flight guidance controller will automatically light. The HSI SEL button is inhibited in dual channel operation.

In dual channel operation, both flight guidance computers use information from both NAV receivers so the approach can continue in the event of failure of one receiver. In dual channel mode, both flight guidance computers use averaged ILS data to perform the same computations, thereby sending identical flight director commands to their respective PFD sides. In case of a receiver failure, the arrow associated with that receiver side will extinguish, and the approach mode will remain active on the remaining receiver.

Automatic cancellation can occur whenever invalid data from one ILS receiver is detected: the flight guidance system will select the remaining side ILS data for guidance. Automatic cancellation also occurs whenever an unflagged ILS data mismatch occurs. The flight guidance system then performs an automatic sensor voting and selection. In both of the above cases the system automatically reverts to single HSI SEL on the side voted by the flight guidance computer.

If the dual channel mode of operation is cancelled manually, the flight director will couple to the side to which it was coupled before the dual channel operation was initiated.

Vertical Speed Hold Mode

The vertical speed hold mode maintains the airplane at a pilot selected vertical speed. The mode is initiated by the following procedures: (1) maneuver the airplane, manually or with autopilot, to the desired climb or descent attitude, (2) establish the vertical speed reference, and engage the mode by pressing the VS button on the GC-810 flight guidance controller. The reference can be changed at any time by using the remotely mounted pitch wheel on the pedestal or the one on the GC-810. A change can also be made by pressing and holding the touch control steering (TCS) button on either control wheel. Press the button, hold it, maneuver the airplane to a new vertical speed reference, and release the button.

When the VS mode is engaged, the annunciations in the PFD will be as follows: VS will be shown in green and the vertical speed target value will be seen in a blue box above the vertical speed scale, in feet per minute.

When the reference vertical speed is changed by either the pitch wheel or the TCS button, the vertical speed reference bug will be repositioned and the boxed target value will be changed.

The VS mode can be cancelled by any of the following: (1) pressing the VS button, (2) selecting any other vertical mode, (3) selecting go-around or standby (STBY), (4) coupling to the cross-side HSI by pressing the HSI SEL button.

The airplane will not exceed the maximum allowable airspeed in the vertical speed mode. If given a vertical speed that will result in exceeding the maximum allowable airspeed or Mach, the flight guidance computer will maneuver the airplane to remain with the allowable maximum speed and MAX SPD will be annunciated in amber in the upper left corner of the PFD.

Flight Level Change Mode

The flight level change mode (FLC) is engaged by pressing the FLC button on the GC-810 flight guidance controller. Pressing FLC overrides all other active pitch flight director modes except VNAV. When VNAV is engaged, pressing the FLC button selects the VNAV submode VFLC. The IAS/Mach indicated when FLC is engaged becomes the IAS/Mach reference. The reference can be changed by using either pitch wheel to establish a new reference. The system will fly either airspeed reference or Mach reference, as it is controlled on the C/O button on the GC-810 flight guidance controller. Switching from IAS to Mach, or vice versa, does not change the reference but changes the nature of the digital readout on the PFD. Switching references will not change the attitude of the airplane.

The FLC mode is basically an airspeed mode, however, it differs from a regular IAS or Mach mode in the following ways: (1) vertical speed excursions are minimized due to air disturbances or large airspeed changes, since the mode primarily tracks airspeed with only short term emphasis on vertical speed. Actual airspeed can temporarily vary from the target airspeed by up to 20 knots.

The FLC mode attempts to change the flight level, at the selected airspeed, from the present altitude to the preselected altitude. The mode therefore tries to prevent the airplane from flying away from the preselected altitude target. In FLC mode, if the throttle is retarded during a climb, for instance, the system will try to maintain a positive vertical speed and will opt to decelerate rather than descend, even after the vertical speed reaches zero.

The pilot can maneuver the airplane while the mode is engaged, as with the other modes, by pressing and holding the TCS button and maneuvering the airplane and releasing the button. The airspeed target will be the speed at the time the button is released. The FLC mode is annunciated by a green FLC on the PFD.

To climb the airplane from present altitude to a preselected altitude, follow this procedure: (1) use the altitude preset knob on the remote instrument controller to set the alert altitude higher than the current altitude, (2) press the FLC button on the GC-810 flight guidance controller; the airspeed current when FLC is pressed will be the target airspeed, (3) advance the throttles to establish climb power. The system will climb the airplane to the preselected altitude, and will maintain the speed reference. The amount of throttle applied will vary the rate of climb achieved. The capture of any armed pitch mode will override the selected FLC mode.

The C/O button on the GC-810 flight guidance controller can override the reference which was selected when the FLC mode was engaged, i.e., pressing the button will change the reference to Mach from IAS and vice versa. In a climb, the FLC reference automatically switches from IAS to Mach when actual Mach exceeds 0.70 M. In a normal descent, the FLC automatically switches from Mach to IAS when the actual IAS exceeds 300 knots.

At FLC engagement above an altitude of 34,275 feet a Mach target airspeed will be selected; below that altitude an IAS reference will be selected.

The flight guidance cannot fly to an airspeed reference outside the normal airplane flight envelope. The system will limit the commanded airspeed to the maximum speed of the airplane (V_{MO} /M_{MO}). This fact is annunciated by an amber MAX SPD in the upper left corner of the PFD.

The target speed range of the system on the Citation X is from 80 knots to 340 knots IAS, or 0.40 to 0.85 Mach.

The FLC mode can be cancelled by any one of the following conditions: (1) pressing the FLC button on the GC-810 flight guidance controller, (2) by the system capturing any other armed pitch mode, or selecting any other vertical mode, (3) selecting go-around mode, or by (4) coupling to the cross-side HSI.

Altitude Preselect Mode

The altitude preselect mode (ASEL) is used in conjunction with another vertical mode to automatically capture, level off, and hold an altitude set with the altitude select knob on the copilot's RI-871 instrument remote controller. The mode will be displayed on each PFD. The mode selected to fly to the new altitude will control the airplane to the point where the altitude preselect mode captures and levels the airplane on the preselected altitude. To make an altitude change by using the altitude preselect mode accomplish the following steps: (1) set the altitude in the PFD's altitude preselect window using the altitude select knob on the copilot's instrument remote controller, (2) adjust the throttle to initiate a climb or descent to the preselected altitude, (3) engage another vertical mode (i.e., VS or FLC) on the GC-810 flight guidance controller; altitude preselect (ASEL) will arm and be annunciated in white on the PFDs and the mode selected to effect the altitude change will capture and be annunciated in green. The selected altitude will capture, the other mode will cancel, and the airplane will be leveled. When the ASEL mode has captured, the altitude error is less than 25 feet, and the altitude rate is less than 5 feet-per-second the system will switch to altitude hold. ALT will be annunciated in green.

It is possible to engage the ASEL mode late if the airplane is still within 250 feet of the selected altitude. If the airplane has gone through the selected altitude and is still within 250 feet of it and the ASEL mode is engaged, the mode will capture immediately and the airplane will level off on the altitude.

Altitude Hold

The altitude hold mode is a vertical mode. When engaged, the flight director uses the vertical axis to maintain a barometric altitude. Pressing the ALT button on the GC-810 flight guidance controller selects the altitude hold mode; it is annunciated by a green ALT in the PFD display. The reference altitude can be changed by pressing the TCS button on either control wheel, maneuvering the airplane to a new altitude, and releasing the TCS button. The altitude at the release of the button will be the new reference altitude. Selecting the altitude hold (ALT) mode cancels any other vertical mode.

Altitude hold can be canceled by any of the following actions: (1) moving the pitch wheel, either on the GC-810 or on the pedestal, (2) pushing the ALT button on the GC-810 flight guidance controller, (3) selecting any other vertical mode, (4) selecting go-around mode, (5) coupling to the cross-side HSI.

Vertical Navigation Mode

The vertical navigation (VNAV) mode is selected by pressing the VNAV button on the GC-810 flight guidance controller. This overrides all other flight director pitch modes. In the VNAV mode the flight guidance system will track the vertical flight profile of the flight management system (FMS). An altitude set into the altitude select window of the PFDs has precedence in case of an altitude conflict in the FMS selected altitude and the PFD selected altitude. The flight management system will not cause the flight guidance system to pass any altitude which has been set into the altitude window (in the upper right side of the PFDs), by the altitude select knob on the copilot's RI-851 remote instrument controller.

Vertical flight level change (VFLC), vertical altitude select (VASEL), vertical altitude hold (VALT), and vertical path (VPTH) modes are possible submodes that can be used with the VNAV mode. The vertical navigation mode and the submodes are all modes which are used in conjunction with the flight management system.

Vertical Flight Level Change (VFLC)

VFLC operates the same way as FLC mode except that the target speed and altitude from the FMS flight plan are used for climb or descent. VFLC engages if VALT is engaged, the target altitude is more than 150 feet from the airplane's current altitude, and the FMS initiates a climb or descent. A third method of using VFLC mode is when VALT or VPTH arm is engaged and the FLC button on the GC-810 flight guidance controller is pressed. The mode is annunciated on the PFD by a green VFLC.

Vertical Altitude Select (VASEL)

VASEL operates the same way as ALT SEL. ALT SEL arms when either VFLC or VPTH is engaged. When the mode captures, VASEL is annunciated in green on the PFDs.

Vertical Altitude Hold (VALT)

VALT operates the same was as ALT. VALT engages automatically after VASEL captures the target altitude. VALT also engages whenever the VNAV button on the GC-810 flight guidance controller is pressed and the airplane is within 250 feet of the FMS selected target altitude. The FMS ALT mode is annunciated on the PFD with a green VALT.

Vertical Path Mode

VPTH mode is used to fly a fixed flight path angle to a vertical waypoint during a descent. The VPTH mode engages whenever the FMS initiates a path descent which can occur while in VFLC or VALT modes. When the mode captures, a green VPTH is displayed on the PFD.

To select the VPTH mode: (1) use the FMS CD-810 control display unit (CDU) to enter the altitude required at the waypoint, and (2) use the CD-810 to enter an angle of descent if a particular flight path angle is required.

For a complete description of VNAV operation, refer to Honeywell FMZ-Series Flight Management System Operating Manual, Publication No. A28-1146-43.

VNAV (VGP - VERTICAL GLIDE PATH MODE) - This is a sub-mode of VNAV that is only valid during FMS approaches and is only presented within 50 miles of the destination airport and the APP button on the Guidance Selector has been pushed. The mode will provide vertical guidance to the approach MDA and does not require the pilot to select the Altitude Selector altitude down to the MDA. To enable the mode, the airport must have a valid approach within the FMS database. With the approach then active in the flight plan, the APP button on the Guidance Selector is then pushed. This will arm the VGP mode as indicated by the white VGP in the PFD. When the airplane is within approximately two miles of the final approach fix, the VGP mode will be active as indicated by VGP changing from white to green in the PFD and the airplane will capture the vertical track and descend to the approach minimums.

For a complete description of VNAV operation, refer to Honeywell FMZ-Series Flight Management System Operating Manual, Publication No. A28-1146-43.

Emergency Descent Mode

The emergency descent mode (EDM) is automatically used by the flight guidance system to automatically descend the airplane in the event of loss of cabin pressurization. The following conditions are required for this mode to engage: (1) the autopilot must be engaged, (2) the cabin altitude must exceed 13,500 feet and airplane pressure altitude must be at or above 34,500 feet. When the mode is engaged, the following events occur: (1) all flight director modes are cancelled and inhibited, (2) ALT preselect is automatically set to 15,000 feet, (3) HDG bug is automatically set to 90° left of the existing heading, (4) the airplane enters a 30° bank for approximately 90° of turn and then rolls wings level, and (5) the airspeed target continuously synchronizes to V_{MO}.

The pilot must adjust the power to idle and set the speed brakes, or the descent rate will be reduced. Once the airplane levels at 15,000 feet, the system remains in emergency descent mode until the autopilot is disengaged. Once the autopilot is disengaged, normal flight director and autopilot operation can be resumed.

Go-Around Mode (Wings Level)

The purpose of the go-around mode is to transition from a approach condition to a climb out after a missed approach. The pilot selects go-around mode by pressing the GA button located on either outboard throttle handle. All flight director modes will be cancelled and the autopilot will disengage. A wings level command and a ten degree climb angle will be displayed on the PFD.

The go-around mode is cancelled by any of the following actions: (1) selecting another pitch mode, (2) pressing the TCS button, and (3) engaging the autopilot.

Takeoff Mode

Takeoff mode is initiated only on the ground. It operates the same as the go-around (GA) mode. The PFD mode annunciation for this mode is a green TO. If the go-around (GA) button is pressed before rotation at takeoff, the flight director command bars will command a 10° nose up wings level attitude. The mode is cancelled as in Go-Around Mode, above.

SYSTEM LIMITS

The following table lists the roll, pitch, course intercept, and track limits of the Primus 2000 Flight Control System.

MODE	CONTROL OR SENSOR	PARAMETER	VALUE
AP ENGAGE	-	Engage Limit	Roll: Up to ±35° Pitch: Up to ±20°
BASIC AUTOPILOT	TCS Pitch Wheel	Roll Control Limit Pitch Control Limit Pitch Angle Limit Pitch "G" Command Limit	Roll: Up to ±45° Pitch: Up to ±20° Pitch: ±20° Preset
HEADING SELECT	Heading SEL Knob	Roll Angle Limit Roll Rate Limit	±27° ±17° Low Bank switched on GC-810 Flt. Guidance Controller 4° per second
VOR, VOR APP, LNAV	Course Knob and NAV Receiver	**Capture:** Beam Intercept Angle (HDG SEL) Capture Point Roll Angle Limit Roll Rate Limit Course Cut Limit at Capture **Track:** Roll Angle Limit Roll Rate Limit Crosswind Correction **Over Station** Course Change Roll Angle Limit	 Up to ±90° Function of beam, beam closure rate, and course error. Min. trip point ±20 mV DC; max. trip point ±180 mV DC ±27° VOR, VOR APP ±30° LNAV 7.0°/sec VOR APP 4.0°/sec VOR 5.5°/sec LNAV ±45° course ±27° 4.0°/sec VOR APP 4.0°/sec VOR Up to ±17° course error Up to 90° VOR ±30° (VOR APP) ±27°

Table 3-1 (Sheet 1 of 3)

Table 3-1 (Continued)

MODE	CONTROL OR SENSOR	PARAMETER	VALUE
APP (LOC or AZ) or BC	Course Knob and NAV Receiver	**Lateral Capture**: Beam Intercept Roll Angle Limit Roll Rate Limit Capture Point **Lateral Track:** Roll Angle Limit Roll Rate Limit Crosswind Correction Limit Gain Programming	 Up to ±90° ±30° ±7°/second Function of beam rate and course error Max. trip point is 180 mA for LOC and 230 mA for AZ. Min. trip point is 35 mA. ±27° of roll ±5.5°/second ±45° of course error Starts at 1500 feet radio altitude or 17 NM DME (MLS)
	GS or GP Receiver and Air Data Computer	**GS or GP Capture:** Beam Capture Pitch Command Limit Pitch Rate Limit Gain Programming	 Variable with intercept +10° to -15° 2.0°/sec (minimum) Starts at 1500 feet radio altitude or 6 NM DME (MLS)
GO AROUND (GA)	Control Switches on Throttles (Disengage A/P)	Fixed Flight Director Pitch Up Command: Wings Level in Roll	10° nose up
PITCH HOLD	TCS Switch depressed	Pitch Attitude Command	±20° Maximum
ALT HOLD	Air Data Computer	Alt Hold Engage Range Altitude Hold Engage Error Pitch Limit Pitch Rate Limit	0 to 65,536 feet ±20 feet ±20° Preset
VS HOLD	Air Data Computer	VERT Speed Engage VERT Speed Hold Engage Error Pitch limit Pitch Rate Limit	0 to +6000 ft/min to -8000 ft/min. +30 ft/min ±20° $\frac{300}{TAS}$ (±2°/sec max)

Table 3-1 (Sheet 2)

Table 3-1 (Continued)

MODE	CONTROL OR SENSOR	PARAMETER	VALUE
FLC	Air Data Computer	Engage Range Pitch Limit Pitch Rate Limit	80 to 350 knots and 0.4 to 0.85 Mach ±20° 2.0°/sec (minimum)
VFLC	FMS	Mach Engage Range Mach Hold Error Pitch Limit Pitch Rate Limit IAS Engage range IAS Hold Engage error	0.4 to 0.8 Mach ±0.01 Mach ±20 0.3 G maximum 80 to 335 knots ±5 knot
VPTH	FMS	Altitude Range Angle Range Bias Range Pitch Limit Pitch Rate Limit	0 to 60,000 feet 0° to -6° (FMS waypoint) ±20° 0.3 G maximum
ALT PRESELECT	Air Data Computer and Instrument Remote controller	Preselect Capture Range Maximum Vertical Speed for Capture Capture Maneuver Damping Pitch Limit Pitch Rate Limit Limiter Synchronized at Bracket Maximum Altitude Capture Error	0 to 65,536 feet ±16,384 ft/min Complemented VERT acceleration ±20° Preset ±25 feet

Table 3-1 (Sheet 3)

ELECTRONIC FLIGHT INSTRUMENT SYSTEM (EFIS)

The Electronic Display System (EDS) and the Electronic Flight Instrument System (EFIS) are both parts of the comprehensive Primus 2000 Integrated Avionics System (IAS). The EFIS is the part of the integrated system that displays flight altitude, airspeed, vertical speed, airplane attitude, heading, course orientation, flightpath commands, weather and mapping presentations, as well as system source annunciations. The Electronic Flight Instrument System is a sister subsystem of the Electronic Display System in the Primus 2000 Integrated Avionics and Flight Control System, therefore, many of the system controllers and switches have been covered under the discussion of the Electronic Display System, above. Those controls having a more direct bearing on flight guidance have been discussed under Flight Guidance, also above, as have the primary flight displays (PFDs), which were covered only where required for the interface discussion of the various controllers. The remaining units of the display system, which bear on the subjects of airplane attitude, heading, and display and control, (i.e., flight instrument system) are discussed here. This includes the RC-840 reversionary and dimming controllers, the primary flight displays (PFDs) (in more detail), the multifunction displays (MFDs), the BL-870 bezel controllers, the BL-871 bezel controllers, and the display system symbol generators. The electronic presentation of the airspeed indicators, altimeters, and vertical speed indicators are covered under Instrumentation, at the beginning of this section, following the discussion of the pitot/static system.

BL-870 PRIMARY FLIGHT DISPLAY (PFD) BEZEL CONTROLLER

The PFD bezel controller, which is mounted below the PFD, has two push buttons and two knobs. The RA/BARO push button is used to select control of radio altitude (RA), or barometric altitude (BARO) for display on the PFD. If RA is selected, the MINIMUMS knob will control the cyan digital radio altitude display at the lower left of the PFD altitude display. A radio altitude for minimum descent reference, or other warning altitude, may be set as desired. If BARO is selected, the MINIMUMS knob controls a cyan bug which can be set along the barometric altitude display; it may be used to set minimum descent altitude, decision height, or other altitude as desired. When the altitude bug is set, a digital readout of the selected altitude is presented in the same place as the radar altitude selection, above, is shown; both BARO and RA selections are not possible at the same time. As the airplane descends the altitude bug will come closer to the center readout line of the altitude presentation. The altitude bug works only in conjunction with the barometric altitude selection.

The MINIMUMS knob may be used to set height values between 20 to 2500 feet R, or barometric MDA or DH altitudes between 20 to 16,000 feet. Clockwise rotation increases the value and counterclockwise rotation decreases the value. The power-up default value is a radio altitude of 200 feet. When the display controller fails, the DH/MDA select becomes inoperative and the RA/BARO display will blank.

The BARO SET knob is used to select the barometric altimeter setting in either inches of mercury (inHG) or in hectopascals (HP). Clockwise rotation increases the value and counterclockwise rotation decreases the value. Selecting the barometric altimeter correction in either inHG or HP is a function that is selected from the PFD setup menu which is controlled by the BL-871 MFD bezel controller, discussed below. The BARO set function of the PFDs is independent of the display controller (DC) and the barometric value can be set even if the DC does not work. However, when cross-side digital air data computer (DADC) is being displayed on the PFD, the pilots will not have control over the displayed BARO setting from their own display controller (DC).

A conventional inclinometer is attached to the center of the bezel controller.

Pressing the standard (STD) button on the bezel sets the barometric altimeter setting to the standard value of 29.92 HG or 1013 HP.

BL-870 PFD BEZEL CONTROLLER

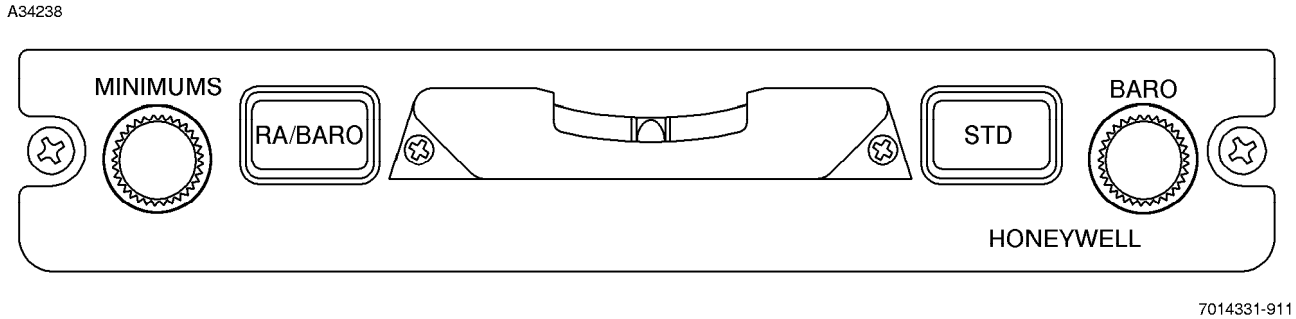

Figure 3-20

BL-871 MULTIFUNCTION DISPLAY (MFD) BEZEL CONTROLLER

The MFD bezel controller has one rotary control knob and six push buttons. The knob is used to control the range of the map or plan display in preset increments. Some of the menu select buttons can be used to change the knob function so it can set flight parameters. When weather is selected for display, the WC-870 weather radar controller is used to set the range. There are two main menus, and several submenus, available for selections of functions on the multifunction displays (MFD), and some for the primary flight displays (PFDs). The arrow push button(<) always selects one of the two main menus, in rotation. Upon power up MAIN MENU 1 is displayed.

BL-871 MFD BEZEL CONTROLLER

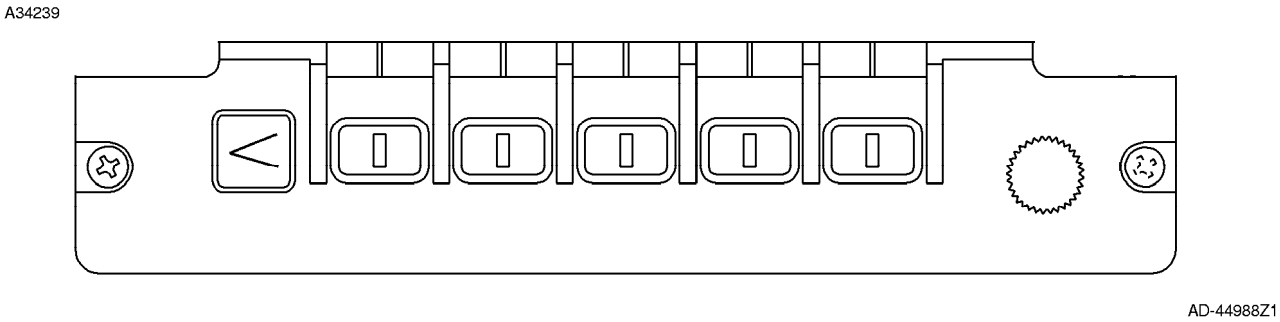

Figure 3-21

When a PFD is selected in the reversionary mode, the menu item keys on the selected PFD will be inoperative. When the EICAS is selected in reversionary mode the reversionary MFD displays EICAS data and the MFD bezel controller controls the EICAS menu.

ELECTRONIC FLIGHT INSTRUMENT SYSTEM BLOCK DIAGRAM

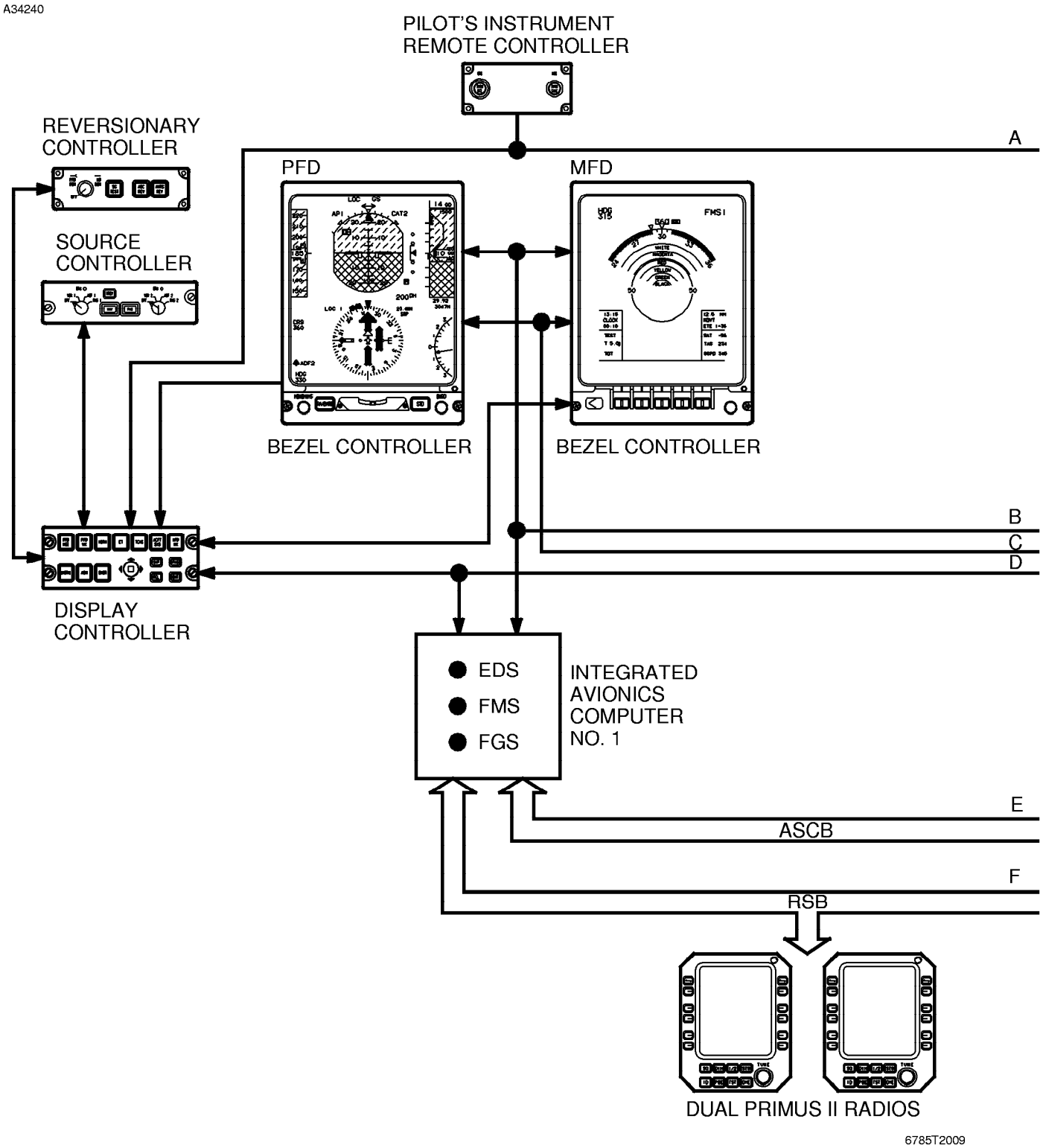

Figure 3-22 (Sheet 1 of 2)

ELECTRONIC FLIGHT INSTRUMENT SYSTEM BLOCK DIAGRAM

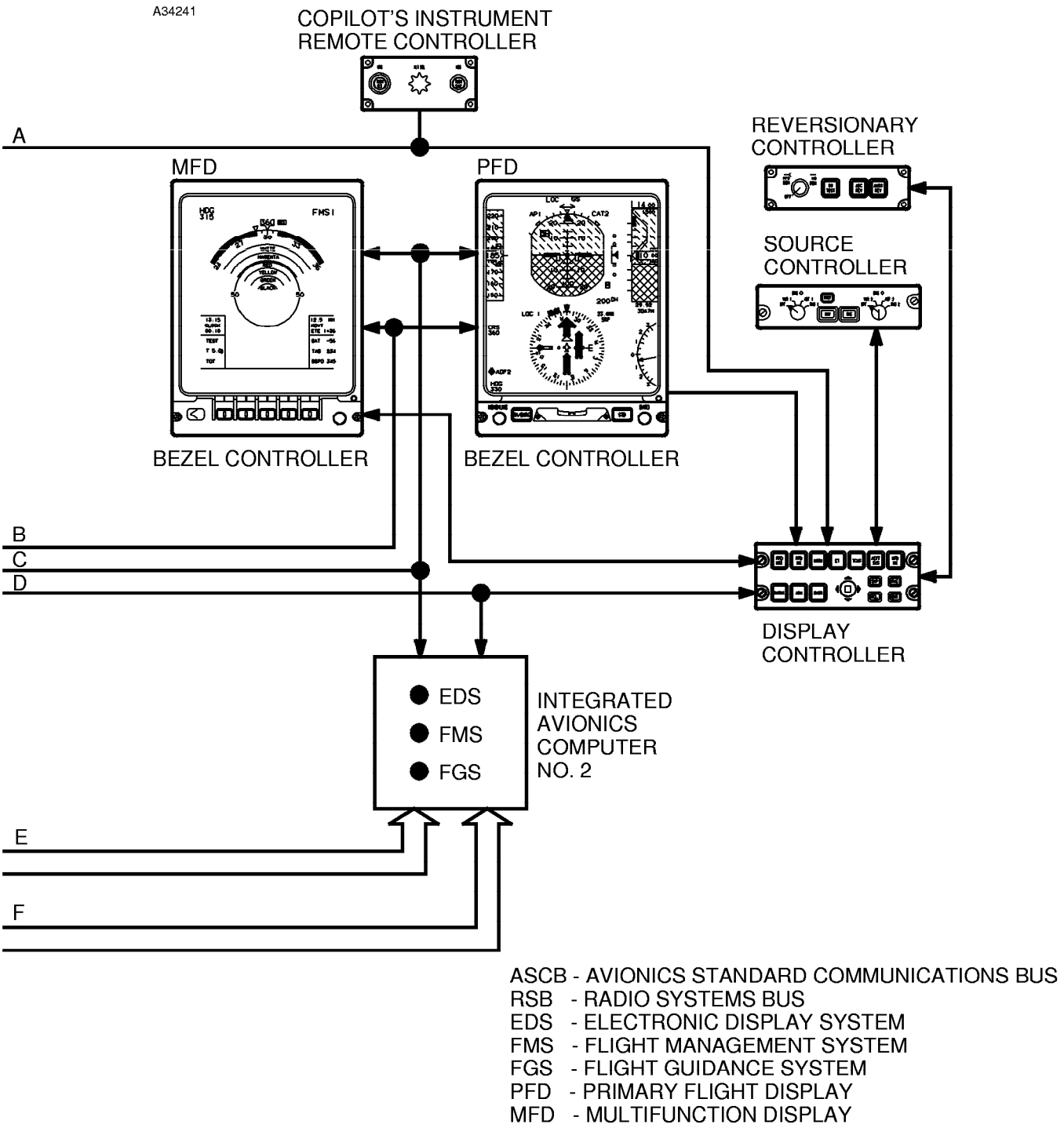

Figure 3-22 (Sheet 2)

MFD Main 1/2 Menu

Procedures for operating the main 1/2 menu are described below. Operation may at first seem complex, but with practice operation becomes easy, because the menu prompts easily lead the operator to the desired control level. More detailed operating instructions, with illustrations, are found in the Primus 2000 Integrated Avionics Flight Control System for the Citation X Pilot's Manual, Pub. No. A28-1146-104-04, which must be available to the flight crew when operating the Primus 2000 system.

The left button (<) on the bezel is used to select Main Menus 1/2 and 2/2, in rotation. Once a submenu is selected, the same button becomes the button (RTN) which returns the operator to the main menu. The default main menu is Main Menu 1/2 which is automatically selected at power-up. The selections on this menu are PFD SETUP, MFD SETUP, ET SET/FT TIMER, EICAS SYS, And V SPEEDS. Selection of any of these items results in the appearance of a submenu. An explanation of the menu and submenu selections follows:

PFD SETUP - Submenu items are: FMD CUE, BARO, and METRIC ALT.

FMD CUE - The flight director command cue can be cycled on and off, and the selection between single cue and cross pointer can be made. A box will enclose the selections made.
BARO - Pressing the key identified BARO toggles between barometric altimeter settings and hectopascals. A box in the display will enclose the selection made.
METRIC ALT - Pressing this menu key toggles between selecting and deselecting the metric altitude presentation. A box around the selection indicates metric altitude is selected. When METRIC ALT is selected, the indication is a green digital presentation of metric altitude located just below the regular altitude display.

MFD SETUP - Submenu items are:

VORS, APTS, TRAFF, V PROF, and WIND XY VEC.
VORS - Selects VOR stations to be displayed on the multifunction display. Up to 10 VORs can be shown.
APTS - Selects airports for display on the multifunction display; up to 9 airports can be shown.

TRAFF - Selects traffic and collision avoidance system (TCAS) for display on the multifunction display (MFD). Control of TCAS modes is by radio management unit (RMU) or radio tuning unit (RTU), depending upon installation.
V PROF (Vertical Profile) - Toggles between selecting (Boxed) and deselecting (unboxed) vertical profile for display on the MFD.
WIND - Toggles between XY (wind components) display and VEC (single wind vector) display on the MFD. This button is inactive in the PLAN mode, which always displays the XY wind components.

ET SET/ FT TIMER - Sets up the clock for elapsed time countdown.

Pressing the button changes identification of the left most button to ET and the next one to it to FIGHT TIMER. To select ET, press the ET button; the initial value of ET is zeros (no time set); and the dashes are boxed in cyan. The label ET will appear above the rotary knob. Rotate the knob clockwise to increase the ET value, and counterclockwise to decrease the value. When the desired ET is set, press the menu button below ET SET. The ET SET title and the data will be boxed. When the button is pressed, the ET value will be displayed on the MFD and the ET SET plus the selected time will be completely boxed; to start the timing press the ET button on the DC-840 display controller.

MULTIFUNCTIONAL DISPLAY (TYPICAL)

A3923

6718P1325

Figure 3-23

The countdown will start and when it gets to zero the color will change to a amber and it will continue to count; from zero, however, it will count upwards and the display will flash, indicating that the time has expired. If the clock already contained a value and a new ET was set, the new value replaces the old one. Timing from zero upwards can be started by simply pressing the ET button on the DC-840 display controller. Progression is: one press; timing starts, second press; timing stops, third press; time zeros. Another press restarts it to repeat the process. FLIGHT TIMER selects elapsed time from the time the landing gear squat switches indicate in flight condition until they compress again upon landing.

EICAS SYS - Submenu items are: FUEL HYD, ELEC, APU, and ENG. When the applicable button is pressed the selection is boxed and the selected parameter is presented on the EICAS display. Pressing RTN (<) returns to the MENU 1/2. The RNG over the rotary knob indicates that the range can be adjusted on the MFD display. (These menu items are separate from selections which can be made on the center EICAS display. Except for the APU selection, they are mostly identical to the EICAS display items, however, they select the window display on the MFD only.)

FUEL HYD - When selected, shows the fuel temperature in the tanks and at the engine and shows the hydraulic system situation with respect to pressure in system A and system B, as well as the quantity of fluid in each system, presented in percent of a full service.
ELEC - When selected, shows DC voltage and amperage of both generators, battery temperature in degrees Celsius of both batteries, and the battery voltage of both batteries.
APU - When selected, indicates APU RPM in percent and exhaust gas temperature (EGT) in degrees Celsius.
ENG - When selected, indicates which full authority digital engine control (FADEC) is controlling each engine, and the oil service status of each engine. The APU start pressure and the status of the bleed air valve (open or closed) is also indicated.

V SPEEDS - Submenu items are: V_1 , V_R , V_2 , V_{REF}, V_{APP}. To set a V_{SPEED} press the button below the applicable speed; the V_{SPEED} selected will box and its designator will also appear over the rotary knob. The rotary knob may then be used to set the speed. When the speed is set press the menu button below it; the speed will appear boxed in white below its identifying designator on the MFD. The corresponding speed bug will be displayed on both PFD airspeed tapes.

The takeoff V_{SPEEDS} are set with the following criteria: In terms of magnitude the order of V_1, V_R, and V_2 is maintained; V_1 set starts at 100 knots; $V_1 \leq V_R$ and $V_R > V_R+3$. Subsequent takeoff V_{SPEEDS} (V_1, V_R, V_2) start at the last V_{SPEED} set value. When the V_1 menu button is pressed on either MFD, V_{ENR} is displayed at the fixed value of 200 Knots. V_1, V_R, V_2, and V_{ENR} values and the corresponding PFD speed bugs are removed when the actual airspeed exceeds 230 knots.

Landing V_{SPEEDS} are set with the following criteria: In terms of magnitude the order of V_{REF}, V_{APP}, is always maintained. $V_{APP} > V_{REF}+3$, and V_{REF} starts at 100 knots.

If the airplane configuration changes (affecting V_{SPEEDS}), V_{REF} must be changed first, so that the landing speeds criteria do not inhibit the setting of the new V_{REF} and V_{APP} values. Landing V_{SPEEDS} automatically deselect when the actual airspeed equals the bug value and deviates by more than ± 50 knots.

MFD Main 2/2 Menu

Procedures for operating the main 2/2 menu are described below. The left button (<) on the bezel is used to select Main Menus 1/2 and 2/2, in rotation. Once a submenu is selected, the same button becomes the button (RTN) which returns the operator to the main menu. The default main menu is Main Menu 1/2 which is automatically selected at power-up. The selections on the 2/2 menu are MFD SRC/1 FMS 2, LRU TEST, and FGC SRC/A B. Selection of any of these items results in the appearance of a submenu. An explanation of the menu and submenu selections follows:

MFD SRC/1 FMS 2 (Multifunction Display Navigation Source [1 or 2]) - There are no submenu items for this selection.

MFD SRC/1 FMS 2 - Pressing the button below the navigation source selection annunciation toggles between the two sources. When one source is selected it is boxed, which indicates that it is the active source. The power-up selection is the on-side source. The FMS source will be annunciated at the top of the MFD in purple; if both sources are the same it will be annunciated in amber.

LRU TEST - Submenu items are: RAD ALT, ADC1, ADC2, TCAS, and MAINT.

RAD ALT - Pressing and holding this menu key initiates a test of the radio altimeter system. The radio altimeter will indicate approximately 100 feet while the button is held down. At the end of the test, it will indicate the radio altitude. The radio altitude (RADALT) test is inhibited once a glideslope (ILS) or glide path (MLS) has been captured.

ADC 1 or ADC 2 - Pressing ADC 1 or ADC 2 tests the respective air data computer while the button is held down. The test Indication occurs on the respective PFD. Mach indication is 0.790 in red in the EADI. The trend indicators for the altitude and airspeed will go to the top of the respective displays and the vertical speed indication will go to 5000 feet up. ADC TEST will be annunciated at the top of the EADI while the test is in progress. The air data computer tests are inhibited in flight.

TCAS - Pressing the TCAS key activates a test of the TCAS system. TEST will be displayed in large letters while the test is active. The TCAS traffic displays show test pattern traffic symbols, red and green resolution advisories, and TCAS TEST during the test. The test routine takes approximately ten seconds to complete. After successful completion, the system returns to the set operating modes and aurally annunciates TCAS SYSTEM TEST OK on the cockpit audio system. If the system fails the test, TCAS FAIL will be displayed in amber on the TCAS display(s) and the audio system will annunciate TCAS SYSTEM TEST FAIL. If the airplane is equipped with Honeywell radios, the same test can be initiated by positioning the tuning window in the TCAS area and pressing the TST button on the radio management unit (RMU). For airplanes equipped with Collins RTU-4210 radio systems, the TCAS test can also be initiated by pressing the TEST key on the TCAS page of the radio tuning unit (RTU).

MAINT - Pressing the MAINT key will access the built in maintenance test functions of the avionics system, and the various submenus. Refer to Chapter 45 of the Airplane Maintenance Manual and the applicable Honeywell maintenance manuals.

REVERSIONARY CONTROLS

The Primus 2000 system uses reversionary controllers to replace failed sensors, displays, or symbol generators with operating units. The operating unit of one side can be used as a backup unit to operate both sides, providing flexibility and redundancy to the system. The panels of the reversionary controllers also provide control space for the dimming controllers.

RC-840 Reversionary and Dimming Controller

The RC-840 reversionary and dimming controller is used to dim the primary flight displays (PFDs) (outer knob) and the multifunction displays (MFDs) (inner knob). Turning the PFD dimming control to OFF position turns off the PFD. If the PFD is turned off, the adjacent MFD display becomes the PFD. Buttons are provided for symbol generator test (SG TEST), air data computer reversion (ADC REV), and inertial reference system reversion (IRS REV)..

The dimming control sets a reference value. Once set, the light sensors on the display units adjust the display brightness for varying light conditions.

RC-840 REVERSIONARY AND DIMMING CONTROLLER

A25618

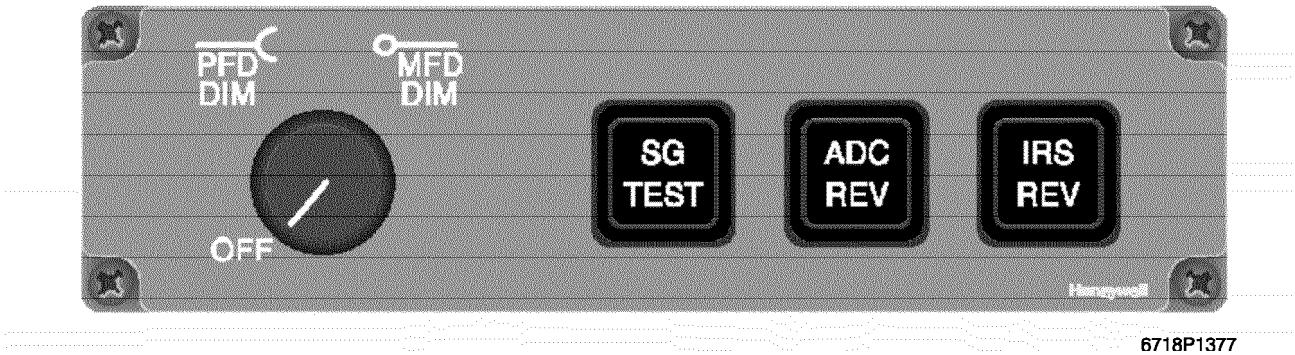

Figure 3-24

When the SG TEST button is pressed, and the airplane is on the ground, the symbol generator goes through a test cycle. TEST is displayed in red and the various caution indications (amber boxed) of HDG, LOC, EICAS, VSPD and IAS are presented on the PFD. PFD/MFD/EICAS failure annunciations (red Xs) are displayed. ATT FAIL and HDG FAIL will be displayed in red, and FD FAIL in amber. The EICAS display will also show the specific test elements, which may be selected.

Pressing ADC REV toggles between the on-side and the off-side micro air data computers (ADCs). If the on-side ADC is selected there is no PFD indication; if the cross-side ADC is selected, an amber ADC 1 or ADC 2 (depending upon which system is serving both sides) will appear in the PFD.

Pressing the IRS REV button toggles between the on-side and the off-side IRS systems. There will be no indication in the PFD of the active system if the on-side system is selected; if the cross-side system is selected in reversion, there will be an amber annunciation ATT 1 and HDG 1 or ATT 2 and HDG 2 (depending upon which system is serving both sides) in the PFD.

RC-841 Reversionary and Dimming Controller

The RC-841 reversionary and dimming controller is a single unit which is used to dim the EICAS display unit and to control reversionary functions. The controller has two knobs (EICAS DSPLY/NORM and SG REV/NORM) and two pushbuttons (DAU 1 REV and DAU 2 REV). The EICAS DSPLY/NORM has two concentric knobs; the inner knob is used to dim the engine instrument and crew alerting system (EICAS) (center) display unit. Once the dimming control is adjusted, sensors on the display adjust the brightness for the varying light conditions. The inner knob (EICAS DSPLY/NORM) is used to select display units for the EICAS display. In the NORM position, the EICAS display is in its normal position on the center display unit. In the L (left) position, the EICAS display is moved to the pilot's multifunction display and the center display unit is blanked. In the R (right) position the EICAS display is moved to the copilot's multifunction display and the center display unit is blanked.

The right knob (SG REV/NORM) is used to select either the normal (NORM) or back-up (SG1 or SG2) symbol generators which are a part of their respective integrated avionics computers.

RC-841 REVERSIONARY AND DIMMING CONTROLLER

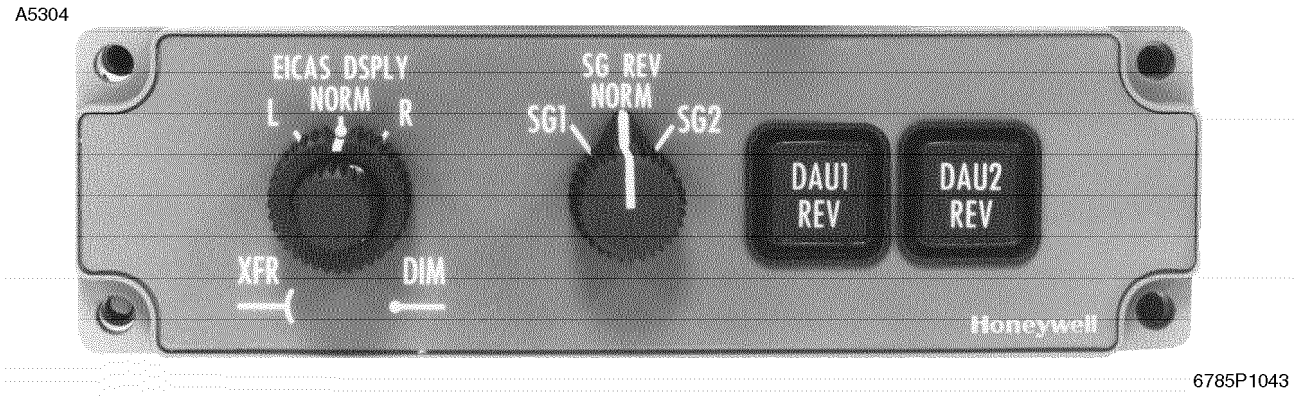

Figure 3-25

In NORM position, SG1 drives the pilot's PFD, MFD, and the EICAS, and SG2 drives the copilot's PFD and MFD. In SG1 position, SG1 drives all five display units; in SG2 position, SG2 drives all five displays. Whenever a single symbol generator (SG) is driving all five of the display units, the condition is annunciated in the PFD by an amber boxed SG1 or SG2, according to which SG is active.

When reversion is selected, both multifunction displays display the same data, so either display controller can be used to select the display. It must be kept in mind that when operating in reversionary mode, the same symbol generator is driving the pilot's and copilot's display units. Either pilot can control the MFD display in reversion. The reversionary symbol generator will also be annunciated in amber between the fan RPM indicator and the ITT indicator on the EICAS display.

Each data acquisition unit (DAU) has two completely independent channels. Normally DAU1 channel A is used for the left engine display, and DAU2 channel A is used for the right engine display on the engine indicating and crew alerting system (EICAS) display. The two pushbuttons (DAU 1 REV and DAU 2 REV) will select channel B of the respective DAU, when pressed, to become the active engine display source. The reversion annunciation (DAU1B or DAU2B, or both) is annunciated in amber, in the EICAS display, between the engine fan RPM and ITT indications. In the unlikely event that both data acquisition units, with their backup channels, should fail, the standby engine instruments provide an additional backup capability.

The data acquisition units and the DAU reversion buttons are more closely associated with the EICAS system, which is discussed below in this section. The EICAS system is a component part of the Primus 2000 system, but is so comprehensive that it is covered separately in detail.

RADIO ALTIMETER

The Citation X radio altimeter installation displays the absolute altitude in a digital readout on each primary flight display (PFD). The radio altimeter system is a high resolution, short pulse system which provides continuous operation in a wide variety of conditions. It operates on a frequency of 4300 MHz. The radio altimeter system interfaces with the data acquisition units (DAUs) and the optional ground proximity warning system. The DAUs provide information to the integrated avionics computers (IACs) which, in turn, provide the digital absolute altitude display In the PFDs, in the lower part of both attitude director (ADI) displays. The digital altitude readout is green until the airplane descends below a set decision height altitude, at which time the display becomes amber. The radio altimeter is in operation during the entire flight, however, there is no altitude indication above an absolute altitude of 2500 feet. If the radio altimeter is invalid, a red box with RA inside will appear instead of the digital read-out of altitude.

The radio altimeter also has an effect on the altitude tape in the PFD. A solid brown raster band will appear on the altitude tape on the primary flight displays as the radio altitude drops below 550 feet. The brown band will cover the lower half of the altitude tape when the airplane is on the ground. A yellow line will be drawn at the intersection of the brown raster and the grey band of the latitude tape. There is no written information displayed in the brown band.

There is also a radio altimeter decision height indication, which is a digital display located in the PFDs in the lower right corner of the ADI display. The decision height is set to a predetermined altitude by rotating the MINIMUMS knob located in the lower left corner of the PFD bezel controller. The decision height is displayed in a window on the lower right side of the attitude director indicator display. When the airplane descends below the selected altitude, an amber DH, enclosed in a white box, will appear in the upper left side of the attitude director indicator display. The copilot's decision height is independent of the pilot's, even though only one radio altimeter is installed. The decision height warning horn will sound only when the airplane descends below the altitude selected in the decision height window on the pilot's attitude director indicator (ADI) display.

The decision height (DH) display is located on each ADI. A different decision height can be set on each indicator, which will control the DH annunciator on that indicator only. The different radio altitude indicators operate independently of each other, even though they are driven by the same radio altimeter transceiver.

The radio altimeter can be functionally tested by selecting the Main 2/2 Menu on the applicable multifunction display, which will show LRU TEST as a selection option. Press LRU TEST and RAD ALT will appear as a submenu option; press RAD ALT and a box will appear around RAD ALT while it is being held down, and the radio altimeter will test. On airplanes equipped with the standard Honeywell AA300 system, the display will indicate 100 feet and the DH annunciator shall not be displayed. On airplanes having the Collins ALT-55 radio altimeter installation the display will indicate 50 feet. After the button is released the actual altitude will be shown. If a decision height is set below the radio altimeter test altitude, a chime will sound as the altitude comes back down through 100 feet (or 50 feet on Collins radio altimeter installations) when the button is released and the amber DH will be annunciated in a box in the upper left side of the altitude sphere.

The radio altimeter test function is disabled after glideslope capture during an ILS or MLS approach in which the autopilot or flight director is being used. Taxiing over accumulations of ice and snow may cause radio altimeter fluctuations.

The system may be used in flight to monitor absolute altitude at any altitude within the range of the altimeter. The MINIMUMS control on the PFD can be set to alert the pilot automatically whenever the airplane reaches a preset altitude. The system may be used to display ground separation and climb conditions during night or instrument takeoffs, as well as to indicate ground clearance during approaches. The DH read-out may be extinguished by turning the MINIMUMS fully counterclockwise.

LASEREF IV INERTIAL REFERENCE SYSTEM

The dual LASEREF IV inertial reference system (IRS) is a strapdown, Shuler-tuned navigation system. It contains three laser gyros and three accelerometers mounted on each of three axes inside the inertial reference unit (IRU). This combination of sensors integrates all inertial sensors in the airplane, eliminating duplication of systems. The gyros and accelerometers sense accelerations along and rotation about each axis. A microprocessor within the IRU performs the calculations necessary to provide present position, velocity, heading and attitude data to the airplane flight management system by using positional changes detected on each axis. The IRS then outputs this information digitally to the flight management system (FMS) and the electronic flight instrument system (EFIS). The IRS outputs include primary attitude, body linear accelerations, body angular rates, inertial velocity vectors, magnetic and true north reference heading, navigation position data, wind data, and inertial altitude.

The dual system consists of two inertial reference units (IRUs), and two mode select units (MSUs). The Primus 2000 avionics standard communications bus (ASCB) provides the interface medium for system control. When the LASEREF IV system is installed, a slightly different RC-840 reversionary and dimming controller is installed (for operation see Electronic Flight Instrument System, above in this section). The AHRS REV button is replaced with a button with the nomenclature IRS REV. Pressing the IRS REV button will select the cross-side IRS to provide the required outputs to the electronic flight instrument system (EFIS). Since both sides will then be supplied by the same IRS system, that fact will be annunciated in amber in both primary flight displays. Since one IRS is supplying both displays, the selections on either RC-840 will affect both displays (left and right). If the button is pressed again, the system will revert back to on-side selection. Power-up default selection is the on-side selection. Since the on-side selection is the normal configuration, it is not annunciated.

The IRS installation interfaces with the automatic flight control system/autopilot (AFCS/AP), the flight management system (FMS), the digital air data computers (DADC), the electronic flight instrument system (EFIS), the weather radar, and the engine and crew alerting system (EICAS).

A white EICAS message (IRS HI LAT ALN 1-2) will illuminate in cases where the inertial reference system is taking extra time to align itself due to a high latitude location. This is a status message to remind the pilot that the system is taking longer than usual to align. It is due to a normal situation caused by a high north or south latitude location.

LASEREF IV INERTIAL REFERENCE SYSTEM INTERFACE DIAGRAM

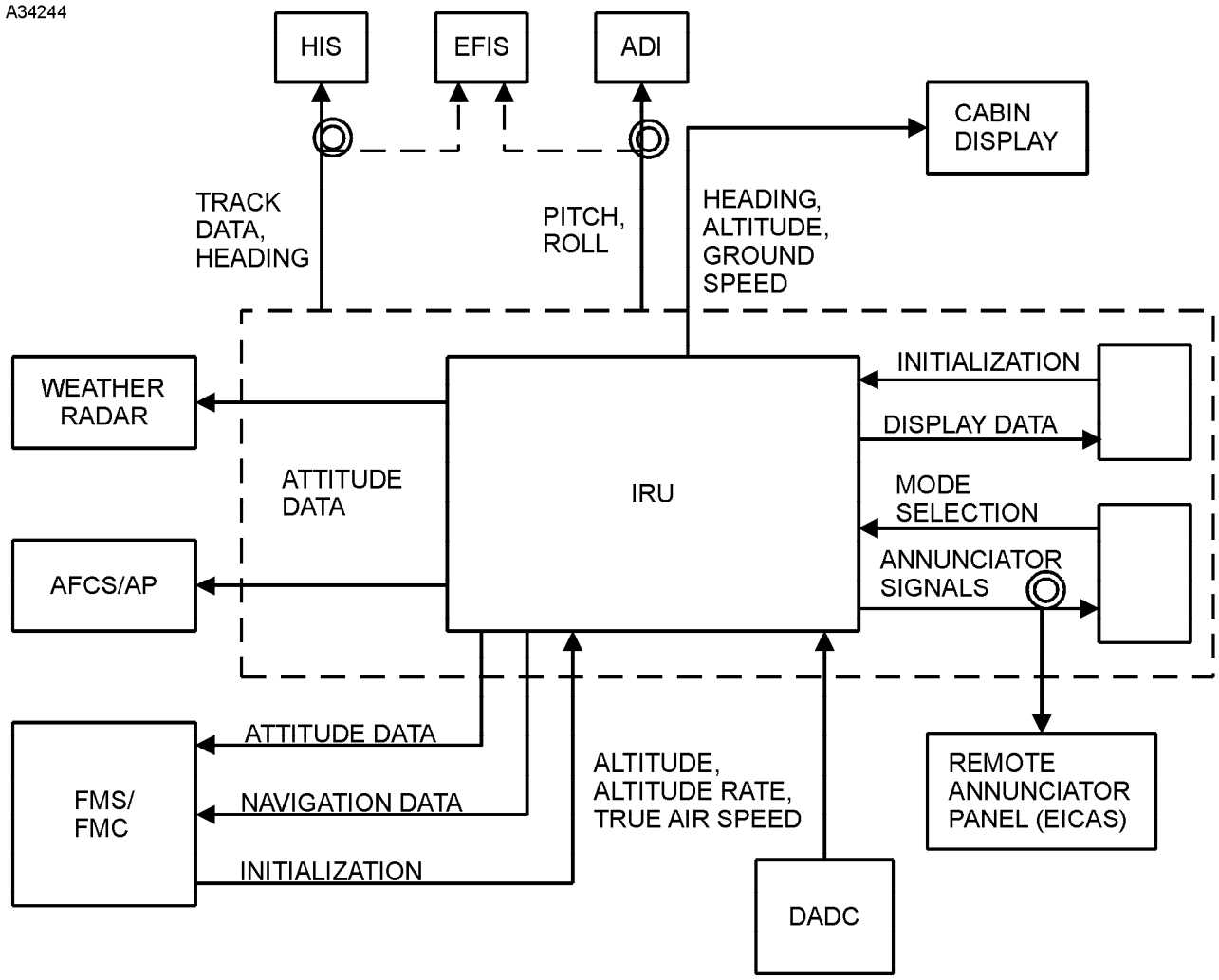

ADI - ATTITUDE DIRECTOR INDICATOR
AFSC/AP - AUTOMATIC FLIGHT CONTROL SYSTEM/AUTOPILOT
DADC - DIGITAL AIR DATA COMPUTER
EFIS - ELECTRONIC FLIGHT INSTRUMENT SYSTEM
FMS/FMC - FLIGHT MANAGEMENT SYSTEM/FLIGHT MANAGEMENT COMPUTER
HSI - HORIZONTAL SITUATION INDICATOR
IRS - INERTIAL REFERENCE SYSTEM
IRU - INERTIAL REFERENCE UNIT
MFD - MULTIFUNCTION DISPLAY
MSU - MODE SELECT UNIT

Figure 3-28

INERTIAL REFERENCE SYSTEM MODE SELECT UNIT

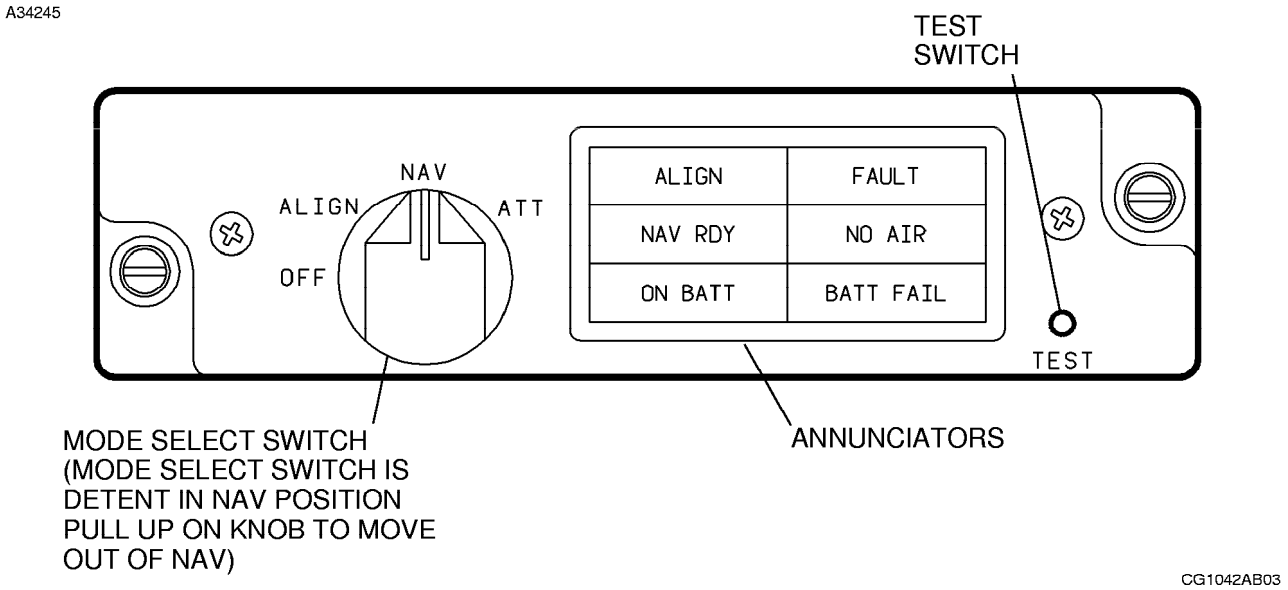

Figure 3-29

INERTIAL MODES OF OPERATION

The IRU operates in four basic inertial modes, three transitional modes, and a test mode. The basic inertial modes are: OFF, ALIGN, NAV, and ATTITUDE. The basic inertial and transitional modes are selected with the four-position rotary mode select switch (OFF, ALIGN, NAV, and ATT) on the mode select control panel. Six annunciators on the panel convey information and warnings concerning status and/or malfunctions of the IRS systems. The mode select panel is discussed below. The mode select switch is detented in the NAV position. It requires four pounds of force to pull the switch out before it can be set to another position. This is primarily to prevent mispositioning of the switch, which could shut down the system in the course of its operation, and which could deprive the airplane of attitude and heading reference as well as required navigation functions. In OFF, system power is removed and the system is deactivated. The operating modes are discussed below.

ALIGN Mode (ALIGN) - In the ALIGN mode the inertial reference unit (IRU) aligns its reference axes to the local vertical and computes heading and latitude by measuring the horizontal earth rate components. At the equator the IRU will complete its alignment in a minimum of 2.5 minutes. As the latitudes are increased either north or south from the equator, the alignment times increase to the point where at latitudes of greater than 70 degrees, alignment will take a minimum of fifteen minutes. In this case a white CAS message IRS HI LAT ALN 1-2 will be annunciated. During the alignment the ALIGN annunciator will be illuminated. Alignment is not certified at latitudes higher than 78.25° north or south. When performing alignment at latitudes greater than 78.25°, normal system tolerances may cause the system performance test to fail, which will prevent the IRU from entering the NAV mode. If alignment at these latitudes is successful, navigation performance accuracies may be degraded.

To complete the alignment the pilot must enter the present position (latitude and longitude) of the airplane in the control display unit (CDU) of the flight management system (FMS). If the position is not entered, the MSU ALIGN annunciator will flash and the inertial reference unit (IRU) will not enter the NAV mode until it receives a valid present position input. The current latitude and longitude may be updated any number of times without delaying alignment, as long as the IRU has not entered the NAV mode. Each successive entry writes over the last one; only the last entry is used for navigation.

The IRU conducts a comparison test and a system performance test on the position that the pilot enters; it conducts the comparison test immediately after each value has been entered. The system compares the entered latitude and longitude with the latitude and longitude stored at the end of the last NAV mode operation. If the entered position is not within one degree of the stored position, the entered position fails the comparison test, which will cause the ALIGN annunciator to flash.

Although the IRU accepts each new entry, it must also pass or override the reasonableness test. If latitude and longitude are entered twice in identical values, the reasonableness test will be overridden. This procedure may be required if the airplane has been moved to a different location without operating the IRU or if a new IRU has been installed. If the new entry passes the reasonableness test the ALIGN annunciator will stop flashing.

When the system completes its alignment test, it will immediately enter a performance test mode. At this stage the longitude is not tested, but the performance test still requires that the latitude entered by the pilot must be within a given limit of the latitude computed by the IRU during alignment. The new latitude must still pass the reasonableness test. If the entered latitude and the system passes both tests, the alignment is completed.

If two consecutive, identical latitudes are entered and the system performance test fails, the flashing ALIGN annunciator will go steady and the FAULT annunciator light will illuminate. If the FAULT annunciator illuminates because of disagreement between the latitude determined to be reasonable by the system and that entered by the pilot, one entry of correct latitude will pass the performance test, turn off the FAULT and ALIGN annunciators, and allow entry into the NAV mode.

NAV MODE (NAV) - In NAV mode the IRU supplies inertial position reference for the airplane and provides outputs of airplane attitude, body rates and accelerations, true and magnetic heading, velocity vectors, wind data, and latitude and longitude. The latitude and longitude entered during alignment are used by the system as a starting point for computations. The inertial present position is computed by the IRU from that starting point. Once in the NAV mode the system will not permit updates of latitude and longitude.

In high latitude navigation, alignment is not certified above 78.25°, but after alignment at other latitudes system accuracy will be normal upon entering latitudes above 78.25°. However, digital magnetic heading is invalidated during flight at latitudes greater than 73 degrees north or sixty degrees south. The pilot must be aware of the effects of no magnetic heading on associated airplane equipment that use magnetic heading supplied by the inertial reference system. For flights at latitudes greater than seventy-three degrees north or sixty degrees south, true heading should always be selected.

True heading selection is a function of the FMZ Flight Management System; refer to the FMZ Series Flight Management System Pilot's Operating Manual.

ATTITUDE MODE (ATT) - When ATT mode is selected, the mode select switch must be left in the ATT position for a minimum of two seconds. The delay is to allow the pilot to reset the switch to the desired position if it was inadvertently set to ATT. There are two conditions in which ATT mode should be selected in flight:

1. The MSU FAULT annunciator lights. This indicates that the IRS has had a critical fault occur, which invalidates all outputs. Entry of the ATT mode clears intermittent critical faults in the IRU. If the FAULT annunciator remains lit after selection of the ATT mode, all outputs remain invalid.

2. All power to the IRS has been temporarily lost. This includes battery backup power.

When entering ATT mode, the IRU enters an erect attitude submode (rapid leveling) for the first twenty seconds. The MSU ALIGN annunciator illuminates and the IRU computes a set of new level axes. The airplane must be held straight and level on a constant heading during this time.

The outputs which are provided by the IRU (attitude rates and angles, vertical velocity, and inertial altitude) will again be provided by the system once rapid leveling has been completed. The attitude outputs are not as accurate as those which are provided in the NAV mode, and navigation outputs such as positions, velocities, and wind data are not provided.

In the ATT mode the IRU must be initialized with magnetic heading; if magnetic heading is not entered, the heading at which the airplane was flying when the attitude mode was selected becomes the zero-degree reference. A heading drift rate of up to fifteen degrees per hour can occur in the ATT mode, so the magnetic heading must be updated frequently from the magnetic compass or other reliable heading reference.

Transitional Modes - There are two transitional submodes: POWER ON/BITE and ALIGN DOWNMODE. In the power on BITE (built-in test equipment) submode, the IRU powers on and performs BITE and system tests. In this mode it checks functions that cannot be tested in flight without interfering with normal operations. In the ALIGN DOWNMODE the IRU accepts optional inputs of latitude and longitude to improve accuracy. The inputs must pass a reasonableness test similar to that of the align mode. Failure of the test causes the ALIGN annunciator to flash immediately after the data entry is completed. A successful test of the position entry will allow the IRU to enter the NAV mode. The align downmode requires only thirty seconds; after the thirty seconds refinement of the heading continues until NAV mode is selected or automatically entered.

Power Off - When OFF is selected, the IRU provides a three second delay before the power-off process begins. The delay permits reselection of the desired position if OFF were to be inadvertently selected. The power then continues for approximately seven seconds to transfer BITE information, last calculated latitude and longitude (if the IRU was in NAV mode), and other IRS parameters to nonvolatile memory.

TEST MODE - TEST mode is selected by pressing the MSU TEST switch. TEST mode is inhibited in ATT mode and when the airplane ground speed exceeds twenty knots. In this mode the IRU outputs preprogrammed signals to airplane instruments. It is a three-phase test, each phase being of eight seconds duration. Phase one exercises all flags and annunciators. During the second and third phases, the IRU outputs fixed signals for display on cockpit instruments. At the end of the test all outputs return to normal.

MODE SELECT UNIT

The mode select units (MSUs) are mounted on the aft pedestal, on the respective system pedestal side. The four basic inertial system modes of operation are indicated by the MSU mode select switch positions: OFF, ALIGN, NAV, and ATT. The MSU also has six annunciators which signal fault warnings or system status. They are: ALIGN, NAV RDY, ON BATT, FAULT, NO AIR, and BATT FAIL.

The MSU fault indications functions and some operating information are discussed below:

ALIGN - The ALIGN annunciator illuminates when the IRU is in ALIGN mode. To complete alignment the pilot must enter the present position (latitude and longitude) of the airplane into the flight management (FMS) system. The ALIGN annunciator illuminates in a flashing mode when an incorrect latitude/longitude entry has been made in the FMS system, or when excessive airplane movement has occurred during alignment. If the airplane has been moved while IRS Power was off, or some other reason that the information that it contains is erroneous, the position information can be written over by entering it (identical values) twice into the system. The IRS conducts a reasonableness test and a system performance test on the latitude and longitude that the pilot has entered.

FAULT - The FAULT annunciator illuminates when the MSU mode switch remains set to ALIGN after a successful alignment has been completed. It will also illuminate when the system has detected a critical fault, which invalidates all IRS outputs. In flight, select the backup IRS system. All of the cockpit instruments which interface with the IRS will display failure warning flags and invalid signal annunciations, etc. If a non-critical fault occurs the fault light will not come on until after the airplane has landed. There are some faults which are classified as "maintenance faults"; these are faults which have a low probability of affecting the IRS performance. These faults will not be apparent to the pilot but a record will be stored in the BITE memory for the information of maintenance technicians.

NAV RDY - The NAV RDY annunciator illuminates when the MSU mode switch remains set to the ALIGN position after successful alignment has been completed. The mode select switch should be set to NAV when the annunciator comes on. The FMS CDU should also indicate that time to "NAV READY" is 0. The timing out of the compass card should have also have been completed when the NAV RDY annunciator illuminates.

NO AIR - The NO AIR annunciator illuminates to indicate no cooling air is being detected from the IRU MT-800 mounting tray fan or an overtemperature condition exists. Operate the IRU until completion of the flight. If the fault annunciator is on or inertial data ceases to be transmitted by the IRU, select the backup reference system, and set the mode selector switch for the affected IRU to OFF. If the IRU is off, the flight is near its destination, and/or additional attitude reference is needed, set the MSU mode select switch from OFF to ATT and operate the IRU in attitude mode for the remainder of the flight. Visually inspect the air filter at the end of the flight; replace a clogged filter.

ON BATT - The ON BATT annunciator illuminates when the IRU is operating on backup battery power. Normal airplane power to the IRS unit has failed or been removed. Check the IRS primary power circuit breaker.

BATT FAIL - The BATT FAIL annunciator will illuminate when the battery voltage from the battery which is used for backup power for the IRS system has fallen below 21 volts and is inadequate to sustain IRS operation if the need should occur.

A test of the IRS system may be performed by pressing the TEST button on the MSU control panel. The test is a three phase test; to accomplish it, place the mode selector switch in the ALIGN or NAV position and press the MSU TEST button. If the mode selector switch is already in ALIGN or NAV, simply press the TEST button. All of the annunciator lights will illuminate for the first phase of the test, and will then return to their original state for the completion of the test, and at the test completion will remain in that state.

ENHANCED GROUND PROXIMITY WARNING SYSTEM WITH WIND SHEAR WARNING

The Enhanced Ground Proximity Warning System provides visual and aural warnings in the following Basic GPWS Modes:

1. Excessive rate-of-descent with respect to terrain (Mode 1).
2. Excessive closure rates to terrain (Mode 2).
3. Negative climb before acquiring a predetermined terrain clearance after takeoff or missed approach (Mode 3).
4. Insufficient terrain clearance based on the airplane configuration (a flap override switch is provided to disable the flap configuration input to the system to prevent nuisance warnings when landing with less than full flaps) (Mode 4).
5. Inadvertent descent below glideslope (Mode 5).
6. SMART 500 callout - Altitude callout at 500 AGL (Mode 6).
7. Windshear Warning and Windshear Caution Alerts (Mode 7).

In addition, the Enhanced Ground Proximity Warning System provides the following terrain map enhance modes:

1. Terrain Clearance Floor Exceedance.
2. “Look-Ahead” Cautionary Terrain and Obstacle Alerting and Warning Awareness.
3. Terrain and Obstacle Awareness Display. The EGPWS provides display of proximate terrain and obstacles. The terrain and obstacle display is color-and intensity-coded (by density) to provide visual indication of the relative vertical distance between the airplane and the terrain or obstacles. The color bands are as shown in the following table:

RELATIVE ALTITUDE IN FEET (above or below aircraft)	DISPLAYED DOT PATTERN AND COLOR
+ 2000 and Greater	Heavy density red
+1000 to +2000	Heavy density bright yellow
-250/-500 to +1000 *	Medium density dark yellow (appears brown)
-1000 to -500 *	Medium intensity bright green
-2000 to -1000	Light density dark green
Caution Alert, Regardless of Altitude	Bright Solid Yellow
Warning Alert, Regardless of Altitude	Bright Solid Red

NOTE

- The yellow-green boundary will be automatically adjusted to a -250 feet value when landing gear is selected DOWN, and to -500 feet when the landing gear is selected UP.
- If there is no terrain data in the database for a particular area, then Terrain Awareness alerting is not available for that area. The affected area is colored magenta.

Aural warning priority is indicated below. IMMEDIATE PILOT ACTION IS REQUIRED WHEN ANY OF THESE MESSAGES ARE RECEIVED IN FLIGHT.

Mode 7 Windshear	"WINDSHEAR, WINDSHEAR, WINDSHEAR" one message per encounter.
Mode 1 Pull Up	"PULL UP" immediately repeated.
Mode 2 Pull Up	"PULL UP" immediately repeated.
Mode 2 Pull Up Preface	"TERRAIN-TERRAIN" not repeated.
Enhanced Terrain Awareness Preface	"TERRAIN-TERRAIN" immediately repeated.
Enhanced Terrain Awareness Warning	"PULL UP".
Obstacle Preface	"OBSTACLE-OBSTACLE" not repeated.
Obstacle Warning	"PULL UP" immediately repeated.
Mode 2 Terrain	"TERRAIN".
Enhanced Terrain Awareness Caution	"CAUTION TERRAIN (Pause) CAUTION TERRAIN (7 Second Pause)".
Obstacle Awareness Caution	"CAUTION-OBSTACLE".
Mode 4 Too Low Terrain	"TOO LOW TERRAIN".
TCF Too Low Terrain	"TOO LOW TERRAIN".
Mode 6 Altitude	"FIVE HUNDRED" one message per non-precision approach.
Mode 4 Gear	"TOO LOW, GEAR" repeated twice, unless terrain clearance continues to decrease.
Mode 4 Flaps	"TOO LOW, FLAPS" repeated twice, unless terrain clearance continues to decrease.
Mode 1 Sinkrate	"SINKRATE - SINKRATE" one message.
Mode 3 Don't Sink	"DON'T SINK" repeated twice, unless terrain clearance continues to decrease.
Mode 5 Glideslope	"GLIDESLOPE" variable delay, more frequent and louder if condition worsens.

NOTE

EGPWS aural alerts and warnings above will override all other aural warnings except overspeed and stabilizer trim in motion warnings.

WEATHER RADAR

PRIMUS 870 COLORADAR

WARNING

THE AREA WITHIN THE SCAN AREA AND WITHIN 15 FEET OF AN OPERATING WEATHER RADAR SYSTEM CONSTITUTES A HAZARDOUS AREA. DO NOT OPERATE THE RADAR SYSTEM WITHIN 15 FEET OF PERSONNEL OR FLAMMABLE OR EXPLOSIVE MATERIAL OR DURING FUELING OPERATIONS. FOR GROUND OPERATION OF A RADAR SYSTEM, POSITION THE AIRPLANE FACING AWAY FROM BUILDINGS OR LARGE METAL STRUCTURES THAT ARE LIKELY TO REFLECT RADAR ENERGY BACK TO THE AIRPLANE.

The Primus 870 digital weather radar system is an advanced multicolor radar that provides the pilot with all the traditional weather displays plus the additional function of turbulence detection. The radar is designed primarily to detect thunderstorms along the airplane flight path, but can be used also for ground mapping. The system gives the pilot a visual indication in color of rainfall intensity and turbulence content. A technique of pulse-pair processing is used. The system senses targets of varying rainfall intensity, as well as senses the random motion of raindrops which is caused by the presence of turbulent air currents. After proper evaluation, the pilot can chart a course to avoid the storm areas.

The 870 Weather Radar System employs a flat plate antenna which is integrated into a single-unit receiver-transmitter-antenna (RTA) assembly which has the receiver-transmitter unit mounted on the rear of the antenna, with the remaining circuitry mounted in the RTA assembly base. The multifunction display (MFD) replaces the conventional radar indicator and serves as the radar indicator, along with its other functions. The radar is controlled by a WC-870 weather radar controller mounted on the center pedestal. A dual WC-870 installation is also available.

The color radar indicator enables the pilot, through the color coded display, to receive current information on cloud formation, thunderstorms, rainfall rate and turbulence. The radar system cannot, however, detect clear air turbulence.

In weather detection mode, target returns are displayed at one of five video levels (0, 1, 2, 3, 4), with 0 being represented by a black screen because of weak or no returns, and levels 1, 2, 3 and 4 being represented by green, yellow, red, and magenta, respectively, to show progressively stronger returns. Areas of high turbulence are shown in soft white (grey-white). In ground-mapping mode, video levels of increasing reflectivity are displayed as black, cyan (sky blue), yellow, and magenta.

The ground-mapping mode (GMAP) permits display of prominent topographical features such as lakes, bays, islands, shorelines, high ground, cities, etc.

WARNING

THE SYSTEM PERFORMS ONLY THE FUNCTIONS OF WEATHER DETECTION AND GROUND MAPPING. IT SHOULD NOT BE USED OR RELIED UPON FOR PROXIMITY WARNING, ANTI-COLLISION OR TERRAIN AVOIDANCE.

PRIMUS 870 COLORADAR DISPLAY

A34246

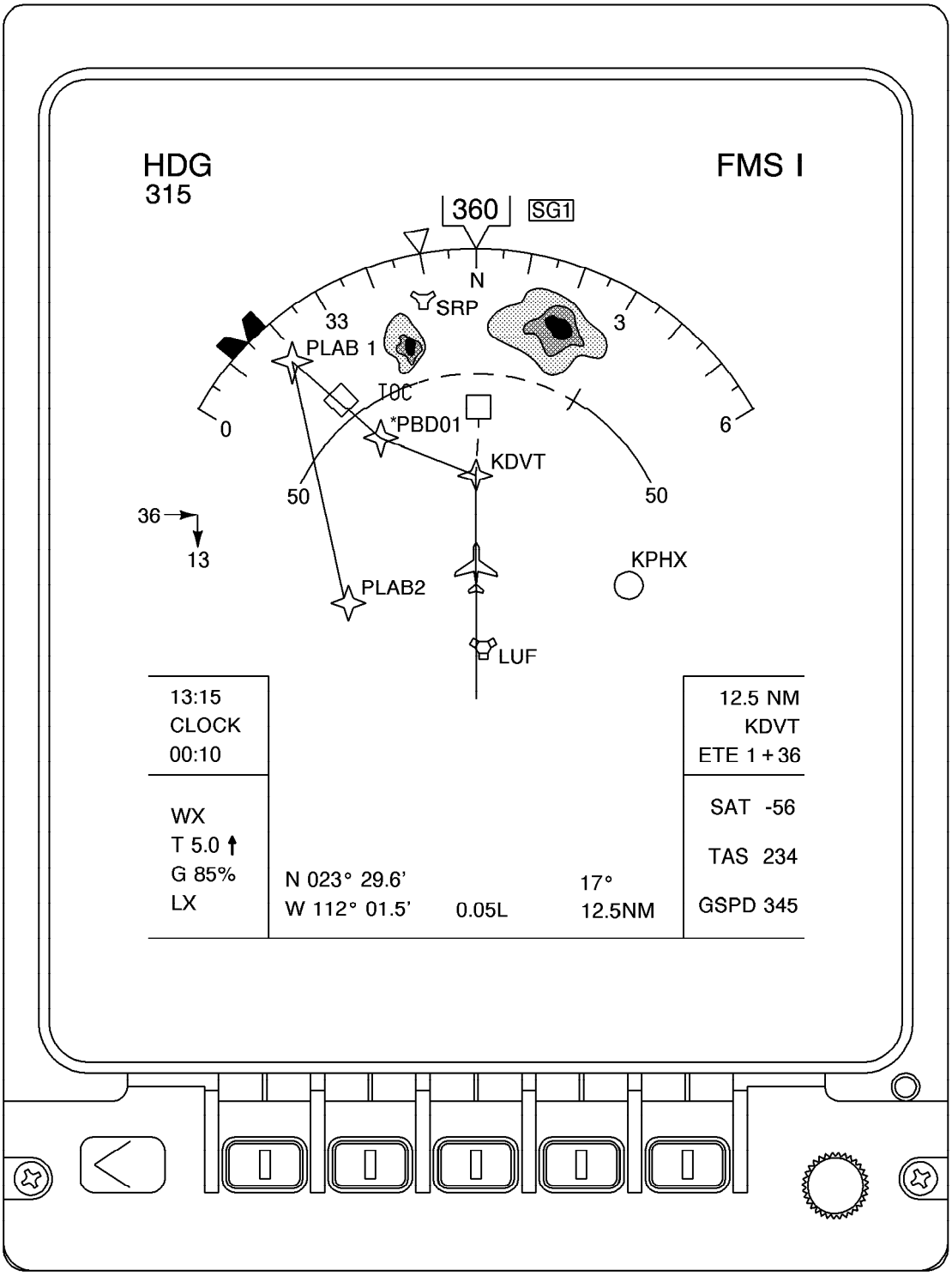

6785T1024

MAP MODE WITH WEATHER DISPLAY AND CLOCK

Figure 3-30

PRIMUS 870 COLORADAR CONTROLLER

A5305

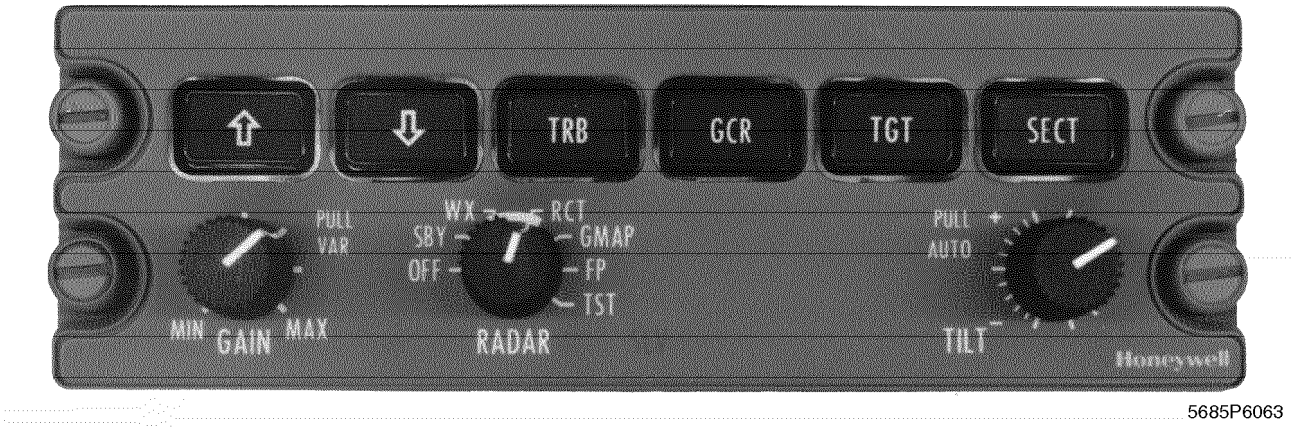

Figure 3-31

The COLORADAR controller is used to control the Primus 870 COLORADAR system. All of the controls that are required to operate the system are located on the controller. Brightness for all of the legends and controls are controlled by the dimming control for the aircraft panel. A description of controller operation and switch functions follows below.

CONTROLS

TILT — Rotary control used to select the tilt angle of antenna beam in relation to the earth plane. Tilt range is between 15 degrees upward (clockwise rotation) and 15 degrees downward (counterclockwise rotation). A digital readout of the antenna angle is displayed on the EFIS.

AUTO TILT (PULL) — Pulling out the tilt control knob places the system into AUTO TILT mode. In this mode the antenna automatically adjusts, based upon inputs received from barometric altitude and selected range. Changes in altitude and range selection will result in antenna tilt changes. The tilt setting can still be controlled to a maximum of plus two or minus two degrees with the tilt control. In autotilt mode an A will be suffixed to the tilt readout.

RADAR — The RADAR function switch controls selection of the primary radar modes of operation.

OFF — Removes power from the system. An amber WX id displayed in the mode field.

SBY — Places system in Standby. Antenna scan is stopped, the transmitter is inhibited and the display memory erased. A blue "STBY" is displayed in the mode field of the display. When warm-up is completed the system automatically switches to the standby mode. If SBY is selected before the R/T/A warmup period is over (approximately 45 seconds) the blue WAIT legend is displayed in the mode field.

WX — Select Weather mode for enroute weather detection. "WX" is displayed in the mode field of the display.

CONTROLS (Continued)

RCT Selects REACT (Rain Echo Attenuation Compensation Technique) circuits. REACT compensates for attenuation of the radar signal when it passes through precipitation. When the signal cannot be compensated a cyan (sky blue) field indicates a dangerous area. Any target detected within the cyan field cannot be calibrated and should be considered very dangerous. RCT is available in WX mode only. RCT forces the system to preset gain. "RCT" is displayed in the REACT field of the display, which is located above the mode field.

GMAP Selects Ground Mapping Mode. Returns from ground targets are enhanced in this mode. As a constant reminder that GMAP is being displayed, the blue GMAP legend is displayed and the color scheme is changed to cyan, yellow, and magenta. Cyan represents the least reflective return, yellow is a moderate return, and magenta is a strong return.

WARNING

WEATHER TYPE TARGETS ARE NOT CALIBRATED WHEN THE RADAR IS IN GMAP MODE. BECAUSE OF THIS, THE PILOT SHOULD NOT USE THE GMAP MODE FOR WEATHER DETECTION.

FP Selects Flight Plan Mode. The indicator screen is cleared of radar data and navigation displays may be presented from the flight management system (FMS). Target alert may be used in this mode in order to maintain an alert for potentially dangerous weather. A green "TGT" will be displayed. If a target is detected from five to fifty-five NM and within 7.5 degrees of dead ahead the TGT annunciator will change to amber. "FLT PLN" is displayed in the mode field. The target alert advises the pilot that a hazardous target is in the flightpath and the WX mode must be selected to view the target.

TST Selects Radar Test Mode. Displays a test pattern to allow verification of system operation. "TEST" is displayed in blue in the mode field.

WARNING

- **THE TRANSMITTER IS ON AND RADIATING IN TEST MODE.**
- **THE SYSTEM PERFORMS ONLY THE FUNCTIONS OF WEATHER DETECTION OR GROUND MAPPING. IT SHOULD NOT BE RELIED UPON FOR PROXIMITY WARNING OR ANTI-COLLISION PROTECTION.**

FSBY (Not on Control) FSBY is an automatically selected radar mode which operates when the Weight-on-Wheels squat switch is activated. Antenna scan and transmitter are inhibited. Simultaneously pressing both range buttons will restore normal operation.

CONTROLS (Continued)

SLV In dual controller installation an SLV annunciator on the lower edge of a controller will illuminate when that controller is turned OFF with the RADAR knob. This annunciation means the controller that is turned OFF is slaved to the controller that remains ON. The annunciator is "dead front" and is not otherwise in evidence. Both controllers must be off before the radar system turns off.

GAIN When the control is pushed in, the receiver gain is preset and calibrated. When pulled out the control manually varies the RTA receiver gain. Minimum gain is set with the control at its fully counterclockwise position. Gain increases as the control is rotated in a clockwise direction from full counterclockwise to the 12:00 o'clock position. At the 12:00 o'clock position both the gain and the sensitivity time control (STC) are at their maximum values. Additional clockwise rotation removes STC. At the fully clockwise position, the gain is at maximum and the STC is at minimum. The full clockwise position produces maximum gain. Selection of RCT (Rain Echo Attenuation Compensation Technique), on the RADAR function switch, overrides the variable gain setting, causing the receiver gain to be fixed and calibrated at a preset value. Selection of low gain settings on the variable gain may eliminate hazardous targets from the display.

RANGE Two momentary contact switches permit range selection of one of six ranges (10, 25, 50, 100, 200, and 300 NM) for the optional lightning sensor system (LSS) and radar. In the FPLN mode, additional ranges of 500 to 1000 miles are added. Activation of the UP arrow increases the range and activation of the DOWN arrow decreases the range. If the system is in forced standby mode (FSBY), pressing both range buttons will restore operation. Power-up range is 100 nautical miles. One-half of the selected range is annunciated at the one-half range mark on the EHSI. When switching from WX mode to FP mode and back, the system will remember the WX mode range selection.

TRB Momentary alternate-action push button which enables and disables the Turbulence Detection mode of operation. TRB mode can only be selected when WX mode is selected and the selected range is 50 nautical miles or less. Areas of moderate or greater turbulence are shown in soft white (grey-white). WX/T is annunciated in the mode field. The radar cannot detect clear air turbulence. Undetected turbulence may exist within any storm cell. Selecting the 100, 200, or 300-mile range turns off the turbulence detection. The“/T” is deleted from the mode annunciation and variable gain is engaged if it was previously selected. Subsequent selection of ranges of 50 miles or less will re-engage the turbulence detection.

WARNING

UNDETECTED TURBULENCE MAY EXIST WITHIN ANY STORM CELL. TURBULENCE CAN ONLY BE DETECTED WITHIN AREAS OF RAINFALL.

CONTROLS (Continued)

GCR Momentary alternate-action push button which enables and disables the Ground Clutter Reduction mode. Selectable only when WX mode selected and the range selection is 50 nautical miles or less. Ground clutter returns are reduced, making it easier to discern the remaining targets which are more likely to be weather. "GCR" is annunciated above the mode field.

The GCR feature has the following limitations: it does not remove all of the ground but it does remove some of the weather. It is most effective dead ahead, and its effectivity is reduced as the antenna scans away from dead ahead. The circuit logic assumes reasonable tilt settings for proper operation.

Selecting the 100, 200 or 300-mile range, or the TRB mode turns off ground clutter reduction (GCR). The GCR legend is deleted from the mode annunciation and variable gain is engaged, if previously selected. Subsequent selection of ranges of 50 miles or less re-engages GCR. If not already selected, GCR forces the radar into preset gain.

WARNING

- **DO NOT LEAVE THE RADAR IN THE GCR MODE.**
- **GCR REMOVES MOST OF THE GROUND TARGETS FROM THE DISPLAY. BUT AT THE SAME TIME IT REMOVES SOME OF THE WEATHER TARGETS.**

TGT Momentary alternate-action push button which enables and disables the Target Alert function. Target Alert monitors the area beyond the range selection within 7.5 degrees of dead ahead. It is selectable in all but the 300 mile range. If a return with certain characteristics is detected in the monitored area, the target alert changes from the blue armed condition to an amber "T" warning condition. When this amber warning is displayed, the pilot should select a longer range to view the questionable target. Target alert is inactive within the selected range.

SECT Momentary alternate-action push button which selects either the normal full azimuth scan of 120 degrees of fourteen looks per minute, or the faster 60 degree sector scan with 28 looks per minute.

LSZ-850 LIGHTNING SENSOR SYSTEM (OPTIONAL)

The lightning sensor system (LSS) is an optional system used to detect and locate areas of lightning activity. It is effective for approximately a 100 nautical mile radius of the airplane. The system gives the operator a visual display of the average position and rate of occurrence of both visible and invisible-type (high energy electromagnetic and electrostatic discharges) lightning activity. After evaluating the LSS display and its relation to precipitation, as indicated by the weather radar display, the operator can effectively plan the proper course to avoid hazardous weather.

The occurrence of a single lightning strike is of little significance as an indicator of turbulence, and is displayed as a lightning alert for five seconds. However, if multiple strikes occur in a given area, this indicates significant and potentially dangerous weather activity. All lightning signals received are denoted with a magenta lightning alert symbol placed at the correct bearing and at the maximum selected range. Lightning alert symbols are removed from the display after five seconds. In the case of severe thunderstorms, the alert symbol may appear to be present all the time in the direction of the storm, indicating a high level of lightning activity.

LSS information is displayed on both the primary flight display (PFD) and the multifunction display (MFD). Precipitation data from the weather radar and the lightning information from the LSS can be displayed simultaneously, on one or the other displays or on both.

Since the system is a passive device in that it does not transmit, it is safe to operate on the ground, even in a congested area. The system scans three hundred sixty degrees of azimuth.

The LSZ-850 system components are the LP-850 Receiver/Processor, the AT-855 antenna, the EFIS display system, and a four-position lightning sensor system switch (LSS) on the WC-870 remote weather radar controller. The rotary switch has the functions: OFF, STBY, LX, and CLR/TST. The following is an explanation of the LSS switch functions:

LSS Control Switch	The LSS control is a four-position rotary switch that controls the optional separate lightning sensor system (LSS). The operating modes are defined below: OFF - In this position power is removed from the lightning sensor system. STBY (Standby) - In this position the LSS display data is not displayed but the system continues to accumulate data. LX - In this position the LSS is fully operational. It collects, processes, and displays data on the multifunction display (MFD) or the primary flight display (PFD), depending upon the selection of the weather display.

LSS Control Switch (Cont.)

CLR/TST (Clear/Test) - When CLR/TST is selected, all memory of past strikes and symbols are erased. After three seconds the equipment enters the test mode. In the test mode, simulated lightning signals are fed to the antenna and a lightning strike is simulated at a bearing of 45° at 25 nautical miles. The simulated strike progresses in severity to lightning rate three within fifteen seconds of the start of the test. A lightning alert is also generated along the outermost range ring at a bearing of 45°. If the system is left in the CLR/TST mode, the ALERT and STRIKE reduce in severity and disappear. After approximately two minutes the lightning strike rate symbol is removed. During the test the antenna is in use, and any real activity that is occurring may also be displayed.

CAUTION

- THE LIGHTNING SENSOR SYSTEM IS A WEATHER AVOIDANCE DEVICE. IT IS NOT A WEATHER PENETRATION DEVICE. WEATHER RADAR IS THE PRIMARY WEATHER AVOIDANCE SYSTEM. THE LIGHTNING SENSOR DATA IS SUPPLEMENTARY INFORMATION.
- USE THE WEATHER RADAR TO DETERMINE STORM CLEARANCE DISTANCES AND AVOID ALL LIGHTNING BY 20 MILES.

LSZ-850 LIGHTNING SENSOR SYSTEM CONTROL

A34247

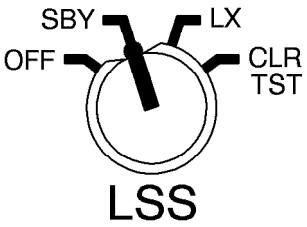

AD17713-R10

Figure 3-32

Three different symbols representing lightning rates are shown below. These symbols appear on the PFD and/or the MFD. They represent the rate of occurrence of lightning flashes for the last two minutes. The symbol location represents the average position of lightning which has occurred in the last two minutes inside an 18 mile diameter area. The lightning is not necessarily occurring at the location represented by the center of the symbol.

RATE OF OCCURRENCE SYMBOLS

A34248

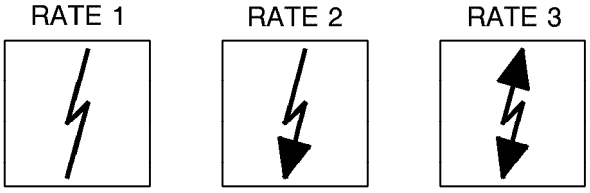

6785T1027

Figure 3-33

In the following graph, the methods by which rate 1, 2, and 3 occurrences are computed is shown. The number of lightning strokes required for each rate symbol is adjusted for distance to the storm, since it is easier for the lightning sensor system to detect lightning close to the aircraft rather than at far distances. The graph plots the number of strokes required for each symbol against range.

STROKES PER SYMBOL VERSUS DISTANCE

A34249

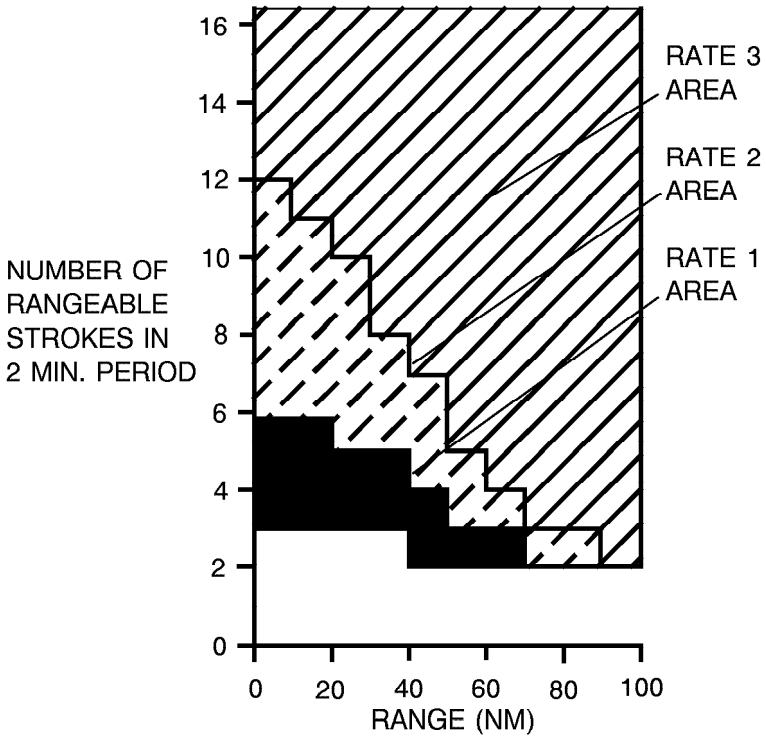

6785T1026

Figure 3-34

MODE ANNUNCIATIONS

Mode annunciation concerning the lightning detector system are displayed on the left side at the bottom of the PFD display in the weather section. The following annunciations may occur, with the meanings defined below.

ANNUNCIATION	DEFINITION
LX/F	Self-test has detected a fault.
LX/S	The system is in the standby mode.
LX/CL	The system is in the CLR mode. This occurs for approximately three seconds after the CLR/TST mode has been selected. After this time the mode annunciation switches to LX/T.
LX/T	The system is in the TST mode. This annunciator may be replaced with a display in the form LXmn. Refer to the Pilot Activated Self-Test, for further details.
LX/I	The receiver is inhibited by XMIT INH input during transmission by communications transmitters. No lightning signals are received during this condition.
LX/H	This annunciation indicates that heading input has been deselected, either by the operator or by the HDG VALID input.
LX/C	The system is in the self-calibration mode. This annunciation reverts to the selected mode approximately 10 seconds after power is applied.
LX/L	The number of computed lightning rate symbols exceeds the capability of the display system.
LX	The system is in the normal operating mode.
LX/OFF	The lightning detector system has been selected off.

PILOT ACTIVATED SELF-TEST

Following the below procedure will verify the operation of the LSZ-850 system. The system generates a known signal in the antenna to accomplish a complete verification of the system operation. It displays the end result on the indicator display.

ANNUNCIATION	DEFINITION
1	Select 50 NM or greater display range.
2	Select CLR/TST on the LU-850 controller.
3	Verify that all lightning rate symbols are erased from the display. After three to four seconds, simulated lightning test pulses are sent to the antenna.

(Continued Next Page)

PILOT ACTIVATED SELF-TEST (Continued)

ANNUNCIATION	DEFINITION
4	Verify that a rate 3 symbol is displayed at 25 nautical miles, at a 45° right azimuth. The symbol will take approximately five to seven seconds to build up. The time will be extended to approximately fifteen seconds if TST is selected immediately from the OFF position, due to initialization of the lightning processor. If strong local interference is present the symbol's range may vary by up to five miles.
5	Verify that a magenta lightning alert symbol is displayed at maximum selected range, at 45° right azimuth. It must remain on for three to seven seconds.
6	To restart the test, switch to LX mode and back to CLR/TST mode.

A failure code for hardware/firmware failure is included in Honeywell Publication Number 28-1146-54. This publication is provided with Citation X airplanes equipped with the LSZ-850 Lightning Sensor System. It contains a complete system description and full operating procedures for the LSZ-850 Lightning Sensor System. For detailed information concerning system composition and operation refer to that publication.

ENGINE INDICATING AND CREW ALERTING SYSTEM (EICAS)

The engine indicating and crew alerting system (EICAS) makes possible modern comprehensive engine and aircraft systems monitoring. It combines several instruments into one display system. EICAS replaces the conventional annunciator panel and many electromechanical instruments with a digital electronic display, which minimizes maintenance and saves scarce instrument panel space. The displays are composed of textual messages or of symbology which lends itself to immediate interpretation. EICAS is the center display of the five electronic display units on the Citation X instrument panel. It is located between the two multifunction displays (MFDs).

EICAS provides the flight crew with instantly available primary engine parameters, control surface position reporting, and major aircraft system monitoring. It receives analog and digital input signals from many sensors located throughout the airplane. The assembly point for many inputs is the data acquisition unit (DAU). The Citation X has two DAUs for collection and dissemination of data. Data is transmitted from the DAUs to dual integrated avionics computers (IAC) through two digital data buses that process the data for display. The IACs contain symbol generators (SG) that subsequently transmit the data to the DU-870 display units (DU).

EICAS provides aural messages as well as textual, and the message text and symbology are colored in order to immediately alert the flight crew to the degree of seriousness of any situation. Textual messages are provided in the colors of white, cyan (dark blue), amber, and red in ascending order of seriousness.

White messages indicate operational or aircraft systems status information. They require no acknowledgment, neither do they trigger any external annunciator systems. These messages are steadily illuminated on the EICAS screen.

Cyan messages are of a more important nature, indicating that crew awareness is required and subsequent crew action may be required. They neither require acknowledgment nor trigger any external annunciator systems. These messages will flash for five seconds when first appearing on the EICAS screen.

Amber messages indicate a need for immediate crew awareness for future correction or compensatory action due to abnormal system conditions; they are preceded by an attention chime, or in some particular cases a unique warning device (horn). They will flash on the EICAS screen until acknowledged, and then remain steady. They will also cause the MASTER CAUTION to illuminate in steady mode until it is acknowledged. Amber messages can be scrolled off the crew alerting system (CAS) display, once acknowledged. If there is insufficient space, newer messages will replace older ones which will then scroll off the display screen. Messages may also be scrolled out of view by the crew in order to read other CAS messages which are not being shown because of lack of space.

Red EICAS messages indicate conditions that require immediate recognition and corrective or compensatory action. Red messages are annunciated four ways: they will flash on the EICAS screen until acknowledged and then remain steady; they will appear on the multifunction display (MFD) until acknowledged and will then be removed; the MASTER WARNING will flash until acknowledged; and there will be a double chime audio tone. Red messages are not allowed to scroll off the EICAS display. Almost all messages of the various levels (colors) will stay on the EICAS display (space permitting) until the condition causing the message is corrected.

GENERAL DISPLAY INFORMATION

This section will discuss the various displays, as illustrated here and on the next page. The center display unit (DU) on the instrument panel is the primary display unit of the EICAS system; the two display units on either side of it are the multifunction displays (MFDs) for the pilot and copilot, respectively. The MFDs present navigation, weather, and other data which is optionally selectable. When a red message appears on the EICAS, it will also be displayed on the cross-side MFD. The two end displays are the primary flight displays (PFDs) for the pilot and copilot. The PFDs present heading, airspeed, altitude, vertical speed, airplane attitude, and navigation data. In this section discussion is limited primarily to the EICAS displays except where, due to reversion or the appearance of red EICAS message, the multifunction displays are involved.

The EICAS displays of the critical systems, of which the crew requires constant information, such as fan speed (N_1), turbine speed (N_2), inter-turbine temperature (ITT), ram air temperature (RAT), oil temperature and pressure, and fuel quantity and flow, are present on the display at all times. Stabilizer trim setting, flap setting, and the synoptic wing view will be displaced by the declutter mode when it is selected. The various "Systems Pages" are crew selectable, since crew alerting system (CAS) messages will warn of any system abnormalities or exceedances. When an exceedance does occur the system produces EICAS textual messages, aural messages, and symbology color change to help alert the flight crew to the situation. The crew can then also immediately select the appropriate system and receive detailed information. These pages will be discussed further on in this section.

EICAS DISPLAY MAP

A34250

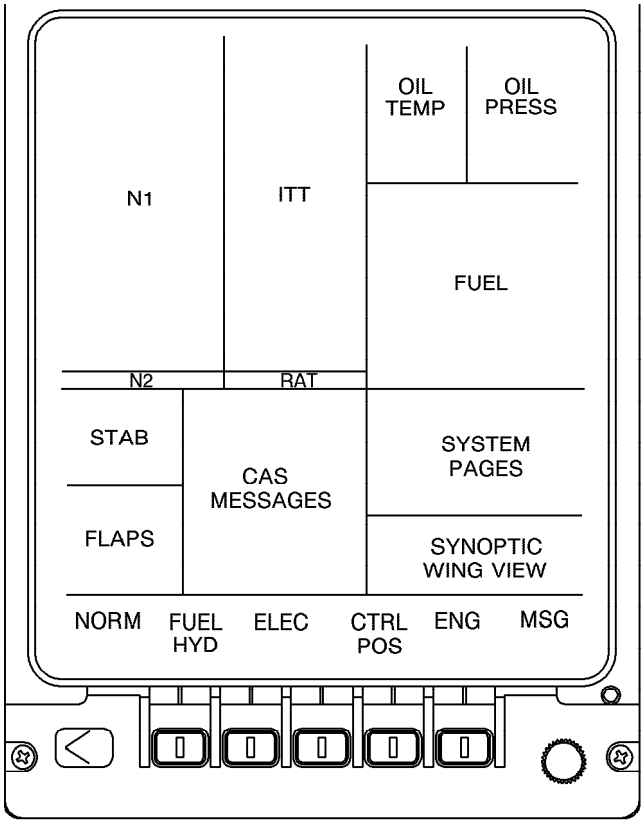

6785T1025

Figure 3-35

PRIMUS 2000 SYSTEM ARCHITECTURE

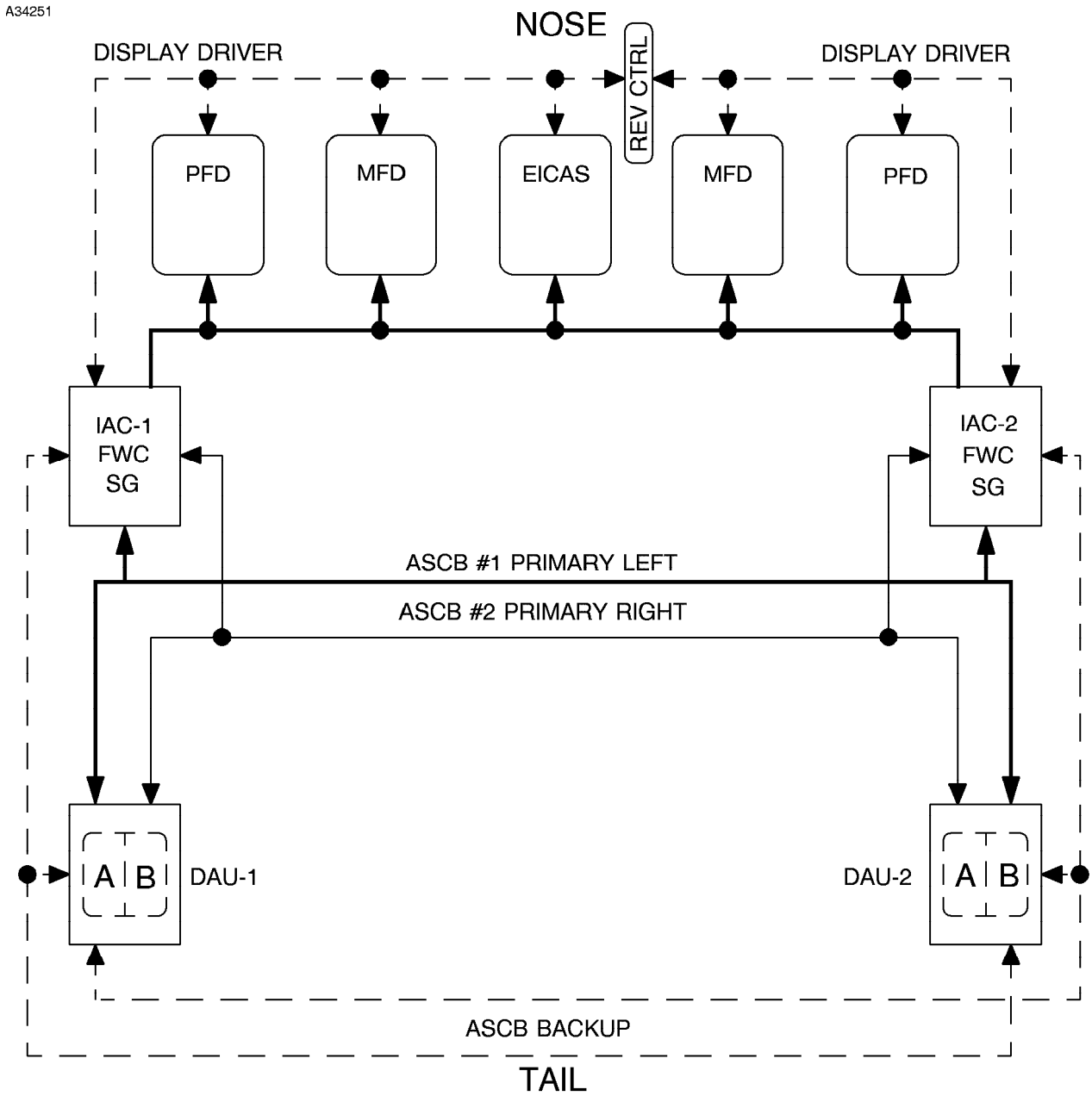

ASCB = AVIONICS STANDARD COMMUNICATIONS BUS
REV CIRL = REVERSION CONTROLLER
DAU = DATA ACQUISITION UNIT
FWC = FAULT WARNING COMPUTER
MFD = MULTI FUNCTION DISPLAY
PFD = FRIMARY FLIGHT DISPLAY
IAC = INTEGRATED AVIONICS COMPUTER
SG = SYMBOL GENERATOR

6785T1028

Figure 3-36

The EICAS system is designed in such a way that there is minimization of oscillating digits which can be a nuisance in digital displays. If a display becomes invalid for any reason, the display will change to amber dashes.

REVERSIONARY OPERATION

Both PFDs can be manually reverted, or displayed on an MFD, in order to provide redundancy and safety in case of a display failure. The EICAS can be reverted to either MFD, if necessary. The system is designed, however, so that MFD data cannot be displayed on a PFD. If the pilot's PFD should fail, the PFD data can be reverted to the pilot's MFD; if the EICAS display should then fail, manual reversion of the EICAS display to the copilot's MFD is the remaining option. In this case, regardless of which MFD is selected, the Primus 2000 system forces the EICAS data to the copilot's MFD

RC-841 REVERSIONARY CONTROLLER

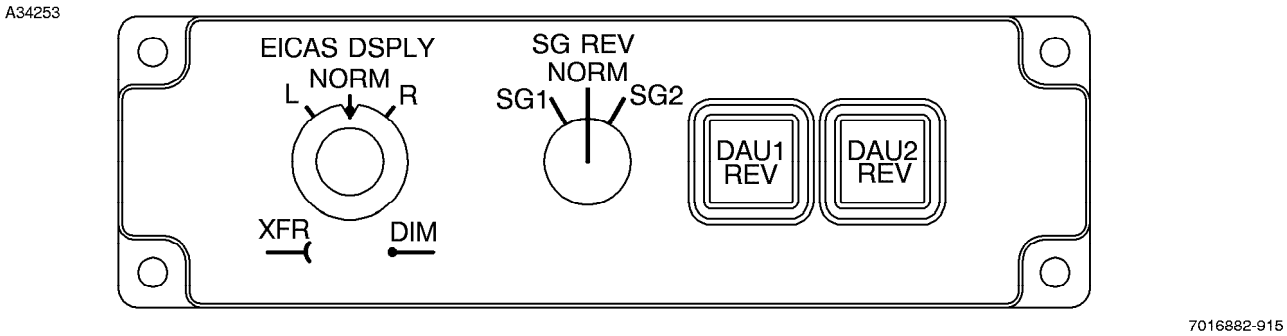

Figure 3-37

The left knob of the EICAS RC-841 reversionary controller controls the position of the EICAS display. The NORM position places the EICAS display at its normal location on the center display unit; the L position places it on the pilot's multifunction display (MFD), and the R position places it on the copilot's MFD. The right knob (center position) directs which symbol generator (SG) is providing the display symbology for the DUs. The symbol generator is part of the integrated avionics computer (IAC). The center (NORM) position selects SG number 1 to drive the pilot's PFD, MFD, and the EICAS, and SG number 2 to drive the copilot's PFD, and MFD. The position SG1 selects symbol generator number 1 to drive all five display units, and SG2 position selects symbol generator number 2 to drive all five displays.

Each data acquisition unit (DAU) has two channels which are completely independent of one another. Normally channel A of DAU 1 is used for the left engine EICAS display and channel A of DAU 2 is used for the right engine EICAS display. There are two momentary switches on the reversionary controller by means of which the pilot may select channel B of either data acquisition unit to be the display source of the engine. When a DAU reversion is selected it will be annunciated in amber between the engine fan RPM and the ITT indications on the EICAS display.

When a single symbol generator is driving all five display units (DU) the condition is annunciated by an amber boxed SG1 or SG2 in all DUs. It must be remembered that the same symbol generator is driving all five display units when operating in reversionary mode. A selection that affects one display will affect all of them, except BARO SET, RADIO ALT, and MINIMUMS.

PARTIAL POWER OPERATION

For the convenience of crew and maintenance personnel, as well as to reduce the number of power on-off cycles, to reduce system "on" time, and to reduce heat production, there is an additional system switch (EICAS/OFF) on the avionics control panel which will power up only the pilot's MFD, the EICAS display controller, channel A of both data acquisition units, and the number one integrated avionics computer. When these units are powered, the pilot's MFD and the EICAS display will be operational, and the rest of the avionics may not need to be turned on. The power-up sequence takes approximately two minutes. The intent of this function is to allow checklist access and engine start without powering up the whole system. Numerous CAS messages are inhibited with the EICAS switch on and the avionics master switch off.

DISPLAYS

The EICAS display is divided into various sections; some functions, which the crew must continually monitor, are always present and are always indicated in their permanent location. There are two areas which change with conditions or selections. The crew alerting section (CAS) area is at the lower center section; the various textual messages conveying system information to the crew appear there. The system pages are located at the lower right of the display. The systems are selectable by the buttons at the bottom of the EICAS display; they are identified by electronically generated white annunciators above each button. When the button is pressed a box will appear around the selection and that system will be presented in the system page area. The identifying nomenclature of the displays is in white letters, as are the scales. Normally, all digital data is presented in green, except as otherwise noted. Invalid digital data will be replaced by amber dashes.

The fault warning computer (FWC) compares engine sensor data to the display wraparound from the EICAS display unit. When the fault warning computer detects a miscompare between the actual data and the displayed data, the amber text "EICAS" will be displayed in an amber box outside the bottom left of the attitude sphere. It will flash for five seconds and then remain steady. This annunciation (amber EICAS) pertains only to the engine parameters of N_1, N_2, and ITT.

FAN RPM (N_1)

The N_1 (FAN) display is located in the upper left corner of the display. It is identified by FAN%. The digital data is shown by three digits to the left of the decimal point and one decimal point to the right. There is an analog display range of from 20% to 105%. If the indication becomes invalid, the vertical bars will be removed. The actual N_1 symbology is driven by the full authority digital engine control (FADEC) which is in control.

The N_1 target value is represented by a cyan bug which appears along the outer side of the scale. The bug is not manually settable. The left engine FADEC drives the left bug and the right engine FADEC drives the right bug. The FADEC on each engine, which is not in command of the engine, is the one which drives the target bug. If the FADEC in command

EICAS DISPLAY

SHOWING THE RIGHT ENGINE BEING STARTED

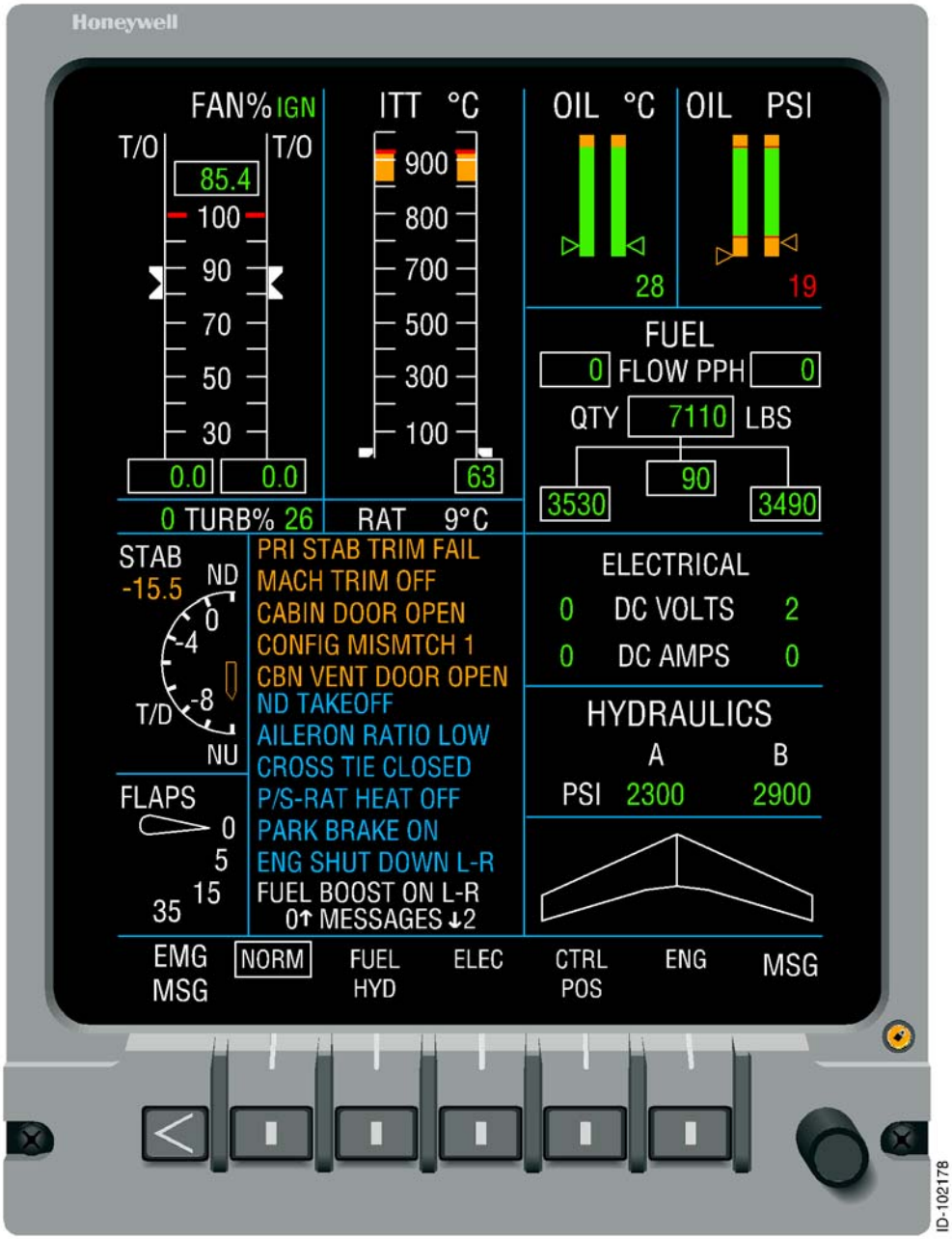

Figure 3-38

will sustain engine operation but since, in that case, the FADEC in control of the engine would be driving the target bug also, the target bug will change from cyan to amber.

There is a fixed red line at 100% on the RPM depiction. At an indicated fan speed above 100% the vertical scales and the digits will turn red. The pointers are filled white bars.

Two FADEC thrust mode indicators (FMI) will be shown next to the FAN% title on either side of it, and slightly below it. The FADEC mode indicators are: maximum takeoff (MTO), takeoff (T/O), climb (CLB), cruise (CRU), and reversionary (REV). The indicators are normally displayed in green, and annunciate the thrust mode in which the FADEC is operating. If the FAN DAMAGE CAS message or the FADEC ADC REV message is active the FMIs will become amber. If the FMI mode T/O is displayed and the throttle levers are in the takeoff detent (75±2°), then the T/O annunciation will be green, however if T/O is displayed and the throttle levers are not in the takeoff detent, then the T/O annunciation will be in white. Only one FMI can be in evidence at any one time. The ignition can be selected ON by FADEC at any time, and that fact will be annunciated in green above the FMI annunciations. In the Model 750 configuration, MTO throttle (most forward) position will result in the same takeoff power setting as the T/O position.

Engine synchronization from N_1 or N_2 is selectable at any time on the (ENG SYNC FAN/OFF/TURBINE) switch on the center pedestal. If either is selected SYNC will be displayed in green between the vertical N_1 scales.

INTERTURBINE TEMPERATURE (ITT)

The analog display range for the ITT starts at 50°C while the digital display begins at 0°C. The analog display range is from 50°C to 950°C, with a fixed red line at 857°C. The indicating pointers are filled white bars which turn to red if the indication goes above the red 850°C line. If the indication becomes invalid for any reason the ITT scales will be removed from the display. The FADEC in command of the engine generates the indicated ITT. Digital ITT readouts are only visible under the following circumstances: the ENG menu button has been depressed, an exceedance has occurred, and during engine start. The digital display will be located at the bottom of the analog display on the respective engine side.

There is a digital turbine (N_2) readout located below the N_1 analog display. The display will be on the respective engine side of the white TURB% identification below the analog display of the FAN speed. Digits to the right of the decimal point are not displayed. The display will change colors depending upon the engine parameters and conditions. The digital turbine readout ranges from 0 to 110%. The digits are colored according to the below table.

	Engine Running	Green	Red
N_2	YES	>57 <101	≥101
	NO	<101	101

RAM AIR TEMPERATURE (RAT)

The ram air temperature (RAT) indication appears just below the ITT display. The display consists of the identification RAT plus two digits, and a minus sign if applicable. The label is RAT even though the display is total air temperature (TAT). The micro air data computers (MADCs) provide the temperature display, and the temperature actually displayed

is the lowest of the two values, if they differ. If one source fails, the remaining RAT source will provide the display with no indication of failure. If both MADCs fail the EICAS will revert to using T2 SYN for the temperature display. T2 SYN is a synthesized compressor inlet temperature from the full authority digital engine controls (FADECs). The RAT label will still be white, but the temperature digits will become amber.

The RAT heater will operate only in flight. A squat switch disables the function on the ground.

OIL TEMPERATURE AND PRESSURE

The oil temperature and pressure are located in the upper right corner of the EICAS display. The oil temperature indication is a bi-colored vertical bar, and the oil pressure is a tri-colored vertical bar. Triangular shaped bugs, which take on the same color as the region to which they are pointing, provide the analog temperature indications. The bugs become solid when they are in the non-green regions of the displays. Digital information is present at the bottom of the display, on the respective engine side, under the following circumstances: (1) The ENG systems page is selected, (2) an exceedance has occurred (if the engine is running), or (3) during engine start. The digital display will be the same color as the region where the analog pointer is located. The color-coded indications are listed in the table below. These colors will be displayed except for when the TLA is greater than 30°, and at all times in flight, when green will be displayed.

Oil	Green	Amber	Red
Temperature °C	21 to 127	-	<127
Pressure PSIG	50 to 90	34 to 50	<34 >90 (95)*

* Airplanes incorporating Honeywell P2000 Integrated Avionics Flight Control System Phase V Software.

FUEL

The fuel display includes both quantity and fuel flow. The system labels are white and the indicating digits are in green numbers inside white boxes. The display moves in increments of twenty with the right most digit always zero. The possible fuel flow indications are from 0 to 4000 pounds per hour with the minimum fuel flow which can be indicated, once the engine is running, being 140 pounds per hour. If the total fuel quantity falls below 1200 pounds the total fuel digits will turn to amber.

Digital fuel quantity is displayed in pounds for each of the three tanks: left, center, and right. The total fuel quantity is indicated in larger green numbers inside a larger white box. When the total fuel in any wing tank becomes less than 500 pounds, the digits will change to amber to warn of the low fuel situation.

FLAPS

The flap display is a synoptic presentation having a range of from 0° to 35°. The indicator is a white airfoil shaped pointer which represents the flap position; it moves in one degree increments. The white scale digits of 0, 5, 15, and 35 do not change color. If a flap

malfunction should occur and the system does not properly indicate flap position, due to invalid data or an out of range condition, the flap pointer will park at the last known position and its color will change to amber.

STABILIZER TRIM

The stabilizer trim indication is displayed in both analog and digital formats. The display is white except for a green area which represents the takeoff setting area. If flaps are 5° the green range is -2 to -5; if 15°, -5 to -8. The green color will only be present when the airplane is on the ground and the takeoff phase inhibit (TOPI) logic is active. When the pointer is in the green area, it will also be green. The digital indication will be at the top of the area designated for the trim display and the digits will follow the color scheme of the pointer. Two significant digits will be presented in 0.1° increments. If the stabilizer trim data become invalid the pointer will be removed and the digits will become amber dashes. In flight the white area will represent the nominal stabilizer trim range (display limits of +1.2° to -12°). If the stabilizer pointer exceeds the display limits or if there is a disagreement between the autopilot trim data and the EICAS, the pointer and digits will change to amber.

SYNOPTIC WING

This display is designed to give the flight crew a quick general view of slat, speed brake, and roll spoiler position. This is of particular importance because many of the flight controls are not visible from the cockpit. During preflight and ground operations the flight crew may use this display to determine speedbrake, roll spoiler, and slat position. Normally only an outline of the wing is shown in cruise flight because the spoilers, slats, and speedbrakes will be in the stowed position. If the system determines that an invalid condition exists, the symbology of the respective control surfaces will change color.

Slats

The slat symbology is a filled white bar for each slat. The bar will be absent when the slats are retracted and present when the slats are deployed. If an asymmetric slat situation should occur, the deployed slat will be shown in amber. If an electrical miscompare should occur, the side with the miscompare will be shown deployed in amber.

Speed Brakes

The speed brakes are the three inboard panels on each wing. The synoptic view displays the speed brakes as filled white bars when they are deployed to an extent greater than five percent of their full deployment. The display does not change to indicate amount of deployment. When the speed brakes are stowed there will be no symbology present. If an asymmetric condition is detected (>5% split), the symbology will become amber displaying all six panels. One resolver is attached to the middle speed brake panel on the left wing, and one is attached to the outboard panel on the right wing; these resolvers report the position, respectively, for the panels on their side.

Roll Spoilers

The roll spoilers are the two most outboard panels on each wing. The roll spoilers are shown as filled white bars only when the airplane is on the ground. The symbology will be the same regardless of the amount of deployment of the spoilers. When stowed, the symbology will not be present.

SYSTEM PAGE DISPLAYS

The system page displays are those which are pilot selectable. They occupy the space at the lower right of the EICAS display unit (DU), and are selected by the bezel buttons located along the bottom of the DU. The selection options are: NORM, FUEL HYD, ELEC, CTRL POS, and ENG which correspond to normal (electrical and hydraulic), fuel system, hydraulic systems, control positions, and engines, respectively. Upon selection, a white box will appear around the menu title and the selected display will appear. A declutter selection (DCLT) is also possible which removes some of the displays when certain altitude and systems conditions are met. It will be discussed at the end of this subsection.

NORM

This menu page selects a display of certain elements from the electrical and hydraulic systems. The electrical display is composed of DC VOLTS and DC AMPS from both generators. The hydraulic display selected on this page is the pressure of the A and B hydraulic systems in PSI. If a CAS message of HYD RUD SYS FAIL or HYD PUMP FAIL B is being displayed, the hydraulic pressure of the standby rudder system (RSS) will also be displayed (the RSS title will be displayed only if digits are displayed). Normal parameters are indicated in green, and exceedances will appear in colors appropriate to the condition, such as in the following two tables.

FUEL/HYD

When the fuel/hydraulic (FUEL HYD) menu is selected, information additional to that which is provided in the NORM display is presented. Specifically, for the fuel system, left and right fuel tank and engine fuel heater outlet temperatures are displayed. All text is white. The digit colors are in accordance with the below table.

Color	Engine °C	Tank °C
Green	≥4≤99	≥-37≤52
Amber	<4>99	<-37>52

The hydraulic portion of the Fuel/Hyd section is composed of a display of system pressures, system quantity in percent full, and the temperatures of the hydraulic fluid in degrees Celsius. The text is white and the color of the digits is in accordance with the below table. Normal ranges are in green and exceedances are in the appropriate color.

Color	Pressure PSI	% Quantity	Temperature ° C	Rudder (Press)
Green	≥2600 ≤3200	≥16	<93	≥2200 ≤3200
Amber	<2600 >3200	<16	≥93 <130	<2200 >3200
Red	<2600*	-	≥130	-

* Red if either engine running and both hydraulic pressures low; green if both engines shut down.

ELEC

Selecting the MENU button provides all available electrical system data. It is only displayed in digital format in whole numbers. The DC amps are presented in units of five. The left and right systems are presented on the respective sides of the display. The text will be white; the digital information and colors will be in accordance with the table below.

Parameter	Green	Amber	Red
VDC	≥23 ≤29	<23 >29*	CAS message)
DC AMPS < FL 410	≤ 400	>400	-
DC AMPS ≥ FL 410	≤300	>300	-
BATT °C	≥-20 ≤62.8	<-20	>62.8 >71**
BATT VDC	≥-23 ≤29	< 23 >29	-

* If the engine is not running the digits will be green.
** After 62.8°C a red BATT 1-2 O'TEMP CAS message is triggered. It is triggered again when the temperature rises above 71°C.

Observing the battery voltage is the only method to determine if external power is being supplied to an airplane bus. The airplane battery voltage will read 24 volts, and the external power will show approximately 28 DC VOLTS.

Remote Circuit Breakers

There are some remote circuit breakers in the system which will trigger a cyan CAS message (REMOTE CB TRIPPED) if they become opened. The importance of the equipment represented by these circuits is such that the crew should be aware of their loss, or of the loss of a circuit for certain back-up equipment. The circuit breakers are as follows:

Circuit Breaker	Circuit Breaker
AHRS Aux	LH Start Logic
APU Feed	LH Landing Light
AVN Emergency Feed	LH Wing Root Heater
Battery 1	Oxygen Seat Belt
Battery 2	RH Landing Light
Cabin ECU	RH Start Logic
Cockpit ECU	RH Wing Root Heater
EICAS Feed	Secondary Trim 1
Elec Emergency Feed	Secondary Trim 2
Emergency Locator Tx	Standby Battery Pack

CTRL POS

The primary purpose of this system page is to allow convenient verification of the primary flight controls before flight. Generally, the area of full travel of the controls is annunciated by bars with a tick mark in the center and tick marks representing the limit of the control surface travel. The center tick mark always indicates neutral surface position. Movement of the control surfaces is represented by triangular bugs which always maintain constant geometry over full travel of the surface. If invalid data is sensed, the bugs are removed from the display. The representation of each control surface is somewhat different; each set of controls is detailed below.

NOTE

Control position bugs are for ground use only.

Ailerons

Each aileron is represented by a bug that moves vertically in proportion to the surface movement. The upper and lower tick marks on the display represent a deflection of 15° in either direction. A split of ±2° is acceptable.

Elevator

Each elevator is represented by a bug that moves vertically in proportion to the surface movement. The upper and lower tick marks on the display represent a deflection of 18° up and 17° down.

Rudders

The rudder display is somewhat complex, due to the rudder limiting characteristics built into the rudder system. The CTRL POS page is useful for monitoring the rudder deflection in the unlikely event that the rudder limiting device should fail. Each rudder is represented by a triangular shaped bug which moves horizontally in proportion to the rudder movement. The bugs maintain constant geometry over the full travel limits of the rudders. Five vertical tick marks are shown along the horizontal line, the full length of which represents the widest range of unrestricted movement for the lower rudder. The center tick mark represent neutral surface position, while the upper and lower tick marks represent full surface position travel. At maximum travel both rudders travel together up to ±18°. The lower rudder continues up to ±30°.

Normal display for rudder limiting will show a solid green horizontal bar indicating the rudder travel that is available. If there is a failure in the rudder limiting system, availability will also be shown digitally. Availability is expressed digitally in the display as a percentage, where 100% indicates full rudder authority is available (±30° below an equivalent airspeed of 143 knots [KEAS] down to ±4° at greater than 332 KEAS). The bar length will be an average of the two rudder limiters as a function of dynamic pressure (refer to Rudder System in Section 2). Two hollow triangular shaped bugs will move horizontally across the bar to indicate upper and lower rudder position.

Single rudder limiter failures will be annunciated by an amber CAS message (RUDDER LIMIT FAIL) and amber text RUDDER LIMIT XX% located above the horizontal bar. The bar color will remain green. The rudder bar length and digits will now be a function of the operating rudder limiter constrained by the failed rudder limiter. For example, if one rudder limiter fails at 90%, the bar will continue to shrink as the operating rudder limiter moves with increasing airspeed. As the airplane slows down such that 100% rudder authority is normally available the bar would still show 90%.

Dual rudder limiter failures will be annunciated by a red CAS message RUDDER LIMIT FAIL and red text, RUDDER LIMIT XX% above the horizontal bar. The XX% will refer to the lesser limiting factor. The red rudder bar length and the digits are a function of the most restrictive limiter. A green bar will partition the red bar into two segments. The green bar length will be a function of normal operation authority versus the dynamic pressure (Q). For example, the green bar represents the amount of rudder authority the crew should have, however, the red bar extensions indicate the amount of rudder travel actually available.

The color of the bugs will follow the bar color. Each time the lower position bug moves into a red area the red CAS message RUDDER LIMIT will be reactivated.

ENG

When the ENG page is selected digital oil temperature, pressure, and ITT data will be displayed adjacent to the respective analog presentation which is always present on the EICAS display, however, when an exceedance occurs that data will be displayed when any page is displayed. The additional information provided on the status page is: which FADEC (A or B) is controlling its respective engine, and the engine status with regard to their respective oil service, represented in quarts low. The identifying text will be white. The digital color codes with respect to the indicated quantities are listed in the Eng Quarts Low table below.

Eng Quarts Low	Color
<3.0	Green
≥3.0	Amber

The bleed air duct pressure (START PRESS) will be presented digitally. Duct pressure may be from the APU, from an engine as in a cross-start situation, or from a ground power unit. The identifying text will be white, and the color code of the pressure reading will be according to the below table. Also, if the APU is running a white CAS message APU ON will appear and an additional white message will be displayed - BLD AIR VLV CLOSED or BLD AIR VLV OPEN, depending upon the status of the APU bleed air valve. The message, if it is displayed, will always be below the START PRESS annunciation. An alternate APU page is available on the MFDs.

	Green	Amber
APU Bleed Air Duct Press	≥20 ≤55	<20 >55

NORM/DCLT

When the airplane passes through 18,000 feet in the climb, a DCLT menu selection will automatically appear below the NORM menu, provided the five conditions listed after the next two paragraphs are true. Under normal conditions the airplane will be normally configured and the menu will appear. The purpose of the additional menu is to make it possible for the crew, if conditions are normal, to declutter the display. If DCLT is selected, the annunciations for stabilizer position, flap position, the systems page, and the synoptic wing view will be removed from the display. When the selection is made, the NORM DCLT menu nomenclature will be boxed. If any other menu page is selected, despite the altitude, the display will not declutter.

If at any time the crew wishes to see any of the hidden data, selecting any menu button will return all of the hidden portions. Also, any deployment of the flaps, slats, or speed brakes, plus any red or amber CAS message will automatically return the missing display elements. Detection of an asymmetric control surface will also return the display.

The display will only declutter if the following conditions are present:

1. EICAS is on the norm PAGE.
2. Pressure altitude is greater than 18,000 feet.
3. No asymmetric conditions exist.
4. Flaps, slats, and speed brakes are not deployed.
5. There are no unacknowledged CAS messages.

When "decluttered" displays are retrieved, as above, depressing the NORM DCLT menu button, or any other menu button, will toggle the display back into the declutter mode, if the flaps, speed brakes, and slats are stowed and all red or amber CAS messages have been acknowledged. Descent back through 18,000 feet will automatically return the display to NORM. A hysteresis of ±250 feet is incorporated into the automatic operation of the DCLT function, in order to prevent oscillation of the mode.

MFD PAGES

Some EICAS pages can be simultaneously displayed on the multifunction displays (MFD). Access to the menu is through the EICAS SYS menu in the MAIN 1/2 menu on the MFDs. Any combination of pages may be displayed concurrently on two MFDs and the EICAS DU. Pages for FUEL HYD, ELEC, APU, and ENG are available on the MFDs. The format of the messages and the information displayed on the MFDs is the same as that on the systems pages of the EICAS display. The NORM and CTL POS systems pages are not available on the MFDs.

The MFD APU supplementary page presents the % RPM of the APU turbine and the exhaust gas temperature (EGT) in degrees Celsius. The color of the text of the APU page is white and the color of the digits will be in accordance with the below table.

Label	Green	Amber	Red
% RPM	<101	≥101 to ≤ 108	>108
EGT °C	≤665	>665 ≤718	>718

ENG MSGS

When either engine shutdown (ENG SHUTDOWN) logic is active, i.e., an engine has been shut down, a menu choice entitled ENG MSGS (Engine Messages) will appear above the < key. When this button is depressed, any message that is inhibited because of the ENG SHUTDOWN logic will be de-inhibited. Pressing the ENG MSGS bezel button again will

restore the ENG SHUTDOWN logic and the message will be inhibited again. If the engine shutdown logic is not active, pressing the < key will produce a white CAS message KEY NOT ACTIVE for five seconds.

CAS MESSAGES

On the Citation X, the Electronic Indicating and Crew Alerting (EICAS) System replaces the conventional annunciator panel. The Crew Alerting System (CAS) portion of the system comprises the functions described in this section. The lower middle section of the EICAS display is reserved for the CAS messages. Presentation of certain messages will be accompanied by a single attention tone, or a double chime (red message).

CREW ALERTING SYSTEM PAGE

A34254

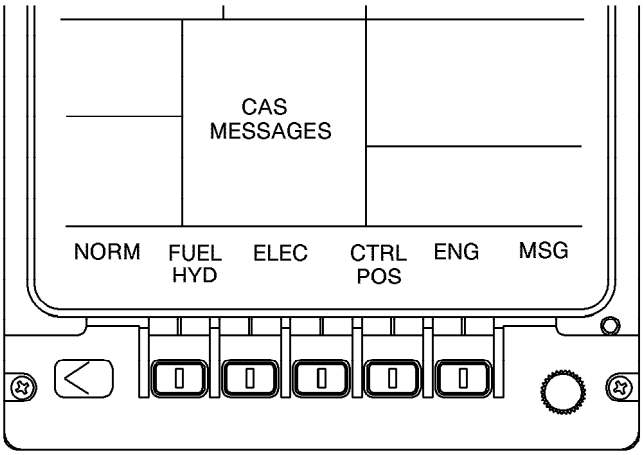

6785T1025

Figure 3-39

The CAS messages are divided into four separate categories, or levels:

1. Warning (level 3)
2. Caution (level 2)
3. Advisory (level 1)
4. Status (level 0)

The colors dedicated to the various levels, beginning with level three are: red, amber, cyan (dark blue), and white. The priority order of the messages in the stacked display is: red at the top, amber in the middle, cyan at the lower middle, and white at the bottom. The possible number of CAS messages will vary slightly depending upon the equipment installed on any particular airplane.

There some conditions under which the CAS system will suppress messages. These are the Takeoff Phase Inhibit (TOPI) and Landing Operations Phase Inhibit (LOPI) situations. Certain messages, which are important but do not under the existing circumstances require immediate attention, are inhibited until the particular phase of flight during which they occurred is completed. They are discussed below in this section. Certain messages, due to their inherent characteristics, are inhibited on the ground and certain ones are inhibited in flight.

LEVEL THREE (WARNING)

A level three message is annunciated in red letters. It indicates a hazard which may require immediate recognition and corrective or compensatory action on the part of the crew. Red messages are annunciated in four ways:

1. The message will flash on the CAS screen until acknowledged, and then remain steady.
2. The message will appear on the cross-side MFD until acknowledged, and then be removed from the MFD.
3. Both of the MASTER WARNING lights will flash until acknowledged by pressing the light; the light will then extinguish.
4. There will be an audio tone (double chime) which will repeat 3 times maximum or until acknowledged.

Messages remain on the CAS display until the condition causing the message is corrected. Red messages are not allowed to scroll off the CAS display. There is room for 12 messages of 18 characters each.

LEVEL TWO (CAUTION)

A level two message is annunciated in amber letters. It indicates a need for immediate crew awareness for future corrective or compensatory action due to abnormal system conditions. Amber messages are annunciated in three ways:

1. The message will flash on the CAS screen until acknowledged, and then remain steady.
2. Both of the MASTER CAUTION lights illuminate steadily until acknowledged by pressing the light; the light will then extinguish.
3. The message will be preceded by a single attention chime.

The messages will stay on the CAS display until the condition causing the message is corrected. Amber messages can be scrolled off the screen. If a message is scrolled off the screen, there will be a status line and arrow indicating in what direction and how many messages that have been scrolled off. If an unacknowledged amber message is on the CAS display and a subsequent amber message is added, there will be no chime for each new message.

LEVEL ONE (ADVISORY)

Level one messages are annunciated in cyan (dark blue) letters. They indicate that crew awareness is required and that subsequent crew action may be required. They do not trigger any external annunciators and they require no acknowledgement. These messages flash for

five seconds after appearing on the screen and then become steady. The message will remain until the condition causing its appearance is corrected. Level one messages may be scrolled off the screen.

LEVEL ZERO (STATUS)

Level zero messages are annunciated in white digits. Their purpose is to convey airplane status or operational information. These messages illuminate steadily on the CAS screen and require no acknowledgement. They do not trigger any external annunciators. Level zero messages may be scrolled off the screen.

DISPLAY

There are twelve lines in the CAS display, eleven of which are dedicated to system information, and one status line. A maximum of 18 characters can be displayed on one line. Some CAS messages have two or more colors. Under certain circumstances these messages may change color due to a redundant failures or a change in circumstances, i.e., GEN OFF L is an amber message - if the other generator should fail the message will change color to red and reappear as GEN OFF L-R. The message will require reacknowledgement. Certain messages are used for more than one related annunciation. This enables more effective use of the limited CAS message space and minimizes complexity. For instance, if an amber DU I HOT message appears and then DU 2 overheats, the original message will become DU 1-2 HOT. The new message would be relocated to the top of its stack in the same color hierarchy, and would require acknowledgement. A scroll knob (MSG) is located on the lower right side of the display; it can be used to scroll messages on and off the screen if there are more messages being displayed than can be shown at one time. When there are too many messages for them all to appear on the display at one time, or when messages have been scrolled off the display, a status line indicating a number, and an arrow, and the identification "MESSAGES" will appear at the end of the display. Its purpose is to indicate that additional messages are found in the direction of the arrow; the color of the status line will be the color of the highest level message that has been scrolled off the display.

If the screen is full of red and/or amber messages, the crew will be alerted to any new cyan or white messages by a flashing status line which will flash for five seconds. When the CAS display is full the system will not automatically scroll into view any cyan or white messages, so this is the only way the crew will become aware of the presence of additional messages.

The CAS screen will be blank when no messages are displayed. If the hardware wraparound fails, the CAS message CHECK DU 3 will appear. When CAS messages are present there will be an indented white label END at the bottom of the stack of messages to indicate that there are no more messages and/or that no messages are scrolled off the display.

FAULT WARNING COMPUTERS

As a part of the Primus 2000 complete system redundancy, the Citation X has dual fault warning computers (FWC), which contain the logic as to when a CAS message should be displayed. The fault warning computers (along with the symbol generators) comprise part of the respective (1 or 2) integrated avionics computers. If the two fault warning computers do not agree, an amber box with amber FWC will appear on both primary flight displays (PFD). The flight crew should then select the valid FWC for display on the EICAS using the SG REV switch. If the controlling FWC fails, all CAS messages and status line data will be removed and replaced with a RED X drawn through the entire CAS display area, until the crew manually selects FWC reversion by selecting SG1 or SG2 on the RC-841 reversionary/dimming control. If the cross-side fault warning computer, which is the one not driving the EICAS display, fails then an amber CAS message FWC 2 FAIL will appear.

Similarly, the Citation X is equipped with dual data acquisition units (DAU). The DAUs are separate and distinct from the fault warning computers, however, signals which result in CAS messages are sent from the originating sensors to the DAUs. The two DAUs are duplicates of each other, both having two internal channels (A and B) which compare the data before sending it on to the fault warning computers. Channel A is the default or displayed channel for each DAU. If either DAU's channel A "sees" a RED CAS message, but the other channel does not, then three CAS messages will be shown (the actual red message and the amber miscompare message [DAU 2 MISCMP] on the CAS display, and the actual red message on the cross-side MFD). The DAUs actually compare discretes; a discrete being an electrical signal (circuit) which comprises an element of information for a particular purpose. Some CAS messages require a number of discretes to be set before a CAS message is displayed. A miscompare occurs when channel A sees a different number of discretes than channel B does. If all of the discretes necessary for producing the message exist, the actual message plus the miscompare message will be displayed. Although, if an insufficient number of discretes exists then no CAS messages would be produced even in reversionary mode. Some CAS messages, however, require only one discrete to generate a CAS message. If channel B sees the discrete but channel A does not, then a DAU miscompare message will be generated. By reverting to channel B the flight crew could then observe the actual CAS message as "seen" by channel B of the DAU. The integrated maintenance test (IMT) subsystem will record all miscompare events so that maintenance personnel can later determine what discretes were involved.

The master fault warning computer drives the master (on-side) MFD and EICAS. The pilot's MFD is typically the master. Since the same message would appear on EICAS and the master MFD, there is no advantage in displaying the third message from the same source. Therefore, the non-master MFD (usually the copilot's) will display the third message. Acknowledging the red message will remove it from the multifunction display and make the display available for checklist use. If more than one level of message occurs simultaneously, a response via the MASTER WARNING will acknowledge only level three (warning) messages. A response via the MASTER CAUTION will only acknowledge amber, not red, messages. In partial power mode (only EICAS/OFF switch in the EICAS position) there will, of course, be no third location for a red message display.

If either DAU "sees" engine data but the other channel does not, then the EICAS will display an amber CAS message (DAU 1-2 MISCMP-ENG). The flight crew must then select DAU reversion to see the other channel.

If the crew selects reversion due to failure of a DAU channel A, the following information is not capable of being displayed since the excitation voltage for this data emanates only from the A channel of the DAUs:

- APU duct pressure
- BATT 1 temp
- Eng fuel temp
- Fuel tank temp
- Hydraulic pressure
- Hydraulic temp
- Hydraulic volume
- Oil level
- Oil pressure
- Oil temp
- Rudder hyd press

If both channels of a single data acquisition unit fail, EICAS will either be unable to display certain messages or the logic inputs creating them will be compromised in such a way that the message(s) is/are meaningless. The following tables list the messages which are compromised or inhibited. The first table lists those messages concerning DAU number 2, the second one DAU number 1.

Messages Compromised if DAU 2 fails:

MESSAGE	MESSAGE	MESSAGE	MESSAGE
APU GEN SWITCH ON	AC BEARING R	FUEL SCAVENGE FAIL R	PITOT HEATER R
APU GCU BIT FAIL	ANTI-ICE ENG FAIL R	FUEL TANK TEMP R	PITOT STATIC SW R
APU	ANTI-ICE ENG ON R	FUEL FLOW R	RUDDER LIMIT R
APU GEN BEARING FAIL	ANTI-ICE SLAT ON R	FUEL LEVEL LOW R	RUDDER LIMIT FAIL R
APU DUCT PRESS	ANTI-ICE STAB ON R	FUEL PRESS LOW R	SPOILERS DEPLOYED R
APU VOLTS	ANTI-ICE STAB FAIL R	FUEL BOOST PUMP ON R	SLATS STOWED R
APU AMPS	ANTI-ICE STAB O'HEAT R	FUEL FWL VLV R	SLATS DEPLOYED R
BAGGAGE AVN O'HEAT	ANTI-ICE WING FAIL R	FUEL QUANTITY R	STATIC HEATER #2 R
BAGGAGE FIRE BOTTLE	ANTI-ICE WING O'HEAT R	FUEL FILTER BYPASS R	STATIC HEATER #1 R
AUX HYD PRESS	AOA PROBE FAIL R	GEN AMPS R	START VLV OPEN R
BATT 2 VOLTS	AOA PROBE HEATER FAIL R	GCU BEARING FAIL R	T/R XSIT R
BATT 2 TEMP	AURAL WARN FAIL R	GEN VOLTS R	T/R MASTER WARNING R
CABIN PAC HI	AVN HOT BAG NOSE R	GEN BEARING FAIL R	T/R STOW R
CABIN DOOR SEAL	BATT OFF R	GEN BUS SOURCE R	T/R DEPLOY R
CABIN DOOR UNLOCKED	BATT O'CURRENT R	GEN CB R	WINDSHIELD O'HEAT R
CABIN VENT DOOR	CABIN ALT >10,000 FT R	HYD FWL VLV B	WINDSHIELD FLT WARN R
COCKPIT DUCT O'HEAT	CABIN ALT >8,500 FT R	HYD TEMP B	WING TANK O'FULL R
COCKPIT PAC O'HEAT	CABIN ALT >14,500 FT R	HYD PRESS B	PITCH FEEL FAIL
FLAP POSITION	CTR-WING XFER ON/OFF R	HYD VOLUME B	
FUEL CROSSFEED	DC BUS EMER R	HYD PRESS LOW B	SECONDARY TRIM FAIL
GLARE FAN #2	ENG OIL TEMP R	HYD VOLUME LOW B	SLATS FAIL
HYD PWR TRANS VLV	ENG START R	HP DUCT O'PRESS R	SMOKE DETECT BAGGAGE
HYD AUX PRESS LOW	ENG FUEL TEMP R	HP P'COOLER O'HEAT R	SP REFUEL DOOR OPEN
HYD UNLOAD VLV B	ENG OIL PRESS R	LAND GEAR UPLOCK R	SELCAL HF 2
NOSE FAN #2	ENG TURBINE VIB R	NOSE DOOR OPEN R	SELCAL VHF 2
ISOL VLV OPEN	ENG FAN VIB R	NACELLE DOOR R	SELCAL UHF
NOSE WHL STEERING FAIL	ENG FIRE R	OIL CHIP DETECT R	STALL WARN #2 VALID
NOSE AVN O'HEAT	FADEC CH A/B R	OIL LEVEL R	TOILET DOOR OPEN
NOSE LAND GEAR UNLOCK	FIRE BOTTLE LOW R	OIL PRESS LOW R	WEIGHT ON WHEELS
PARK BRAKE	FIRE DETECTION FAIL R	PAC HP VLV OPEN R	XFEED BUS SOURCE

Messages compromised if DAU number 1 fails:

MESSAGE	MESSAGE	MESSAGE	MESSAGE
APU FIRE BOTTLE LOW	ANTI-ICE SLAT ON L	FUEL FWL VLV L	START VLV OPEN L
ANTISKID FAIL	ANTI-ICE STAB ON L	FUEL QUANTITY L	T/R XSIT L
APU BUS SOURCE	ANTI-ICE STAB FAIL L	FUEL FILTER BYPASS L	T/R MASTER WARNING L
APU FIRE	ANTI-ICE STAB O'HEAT L	GEN AMPS L	T/R STOW L
APU FIRE DETECT FAIL	ANTI-ICE WING FAIL L	GCU BEARING FAIL L	T/R DEPLOY L
BAGGAGE ALTITUDE	ANTI-ICE WING O'HEAT L	GEN VOLTS L	WINDSHIELD O'HEAT L
BAGGAGE DOOR	AOA PROBE FAIL L	GEN BEARING FAIL L	WINDSHIELD FLT WARN L
BATT DISC 1	AOA PROBE HEATER FAIL L	GEN BUS SOURCE L	WING TANK O'FULL L
BATT BUS SOURCE	AURAL WARN FAIL L	GEN CB L	LAND GEAR UNLOCKED
BATT 1 VOLTS	AVN HOT BAG NOSE L	HYD FWL VLV A	LATERAL ACCEL (FDR)
BATT 1 TEMP	BATT OFF L	HYD TEMP A	LONGITUDE ACCEL (FDR)
COCKPIT PAC HI	BATT O'CURRENT L	HYD PRESS A	NORMAL ACCEL (FDR)
CABIN DOOR	CABIN ALT >10,000 FT L	HYD VOLUME A	PITCH/ROLL DISCONNECT
CABIN DUCT O'HEAT	CABIN ALT >8,500 FT L	HYD PRESS LOW A	PRI STAB TRIM 1 CB
CABIN PAC O'HEAT	CABIN ALT >14,500 FT L	HYD VOLUME LOW A	PRI STAB TRIM 2 CB
COMPARTMENT LTS CB	CTR-WING XFER ON/OFF L	HP DUCT O'PRESS L	PRIMARY TRIM FAIL
CTR FUEL QUANTITY	DC BUS EMER L	HP P'COOLER O'HEAT L	SEAT BELT
CROSS TIE CLOSED	ENG OIL TEMP L	LAND GEAR UPLOCK L	SMOKE DETECT CABIN
CVR FAIL	ENG START L	NOSE DOOR OPEN L	SPEED BRAKE
ESCAPE HATCH OPEN	ENG FUEL TEMP L	NACELLE DOOR L	SPEED BRAKE ASYMMETRY
FDR FAIL	ENG OIL PRESS L	OIL CHIP DETECT L	SELCAL HF 1
FLAP INOP	ENG TURBINE VIB L	OIL LEVEL L	SELCAL VHF 3
FUEL GRAVITY XFLOW VLV	ENG FAN VIB L	OIL PRESS LOW L	SELCAL VHF 1
GLARE FAN #1	ENG FIRE L	PAC HP VLV OPEN L	STALL WARN #1 VALID
HF FAN	FADEC CH A/B L	PITOT HEATER L	TAILCONE DOOR OPEN
HYD AUX PUMP ON	FIRE BOTTLE LOW L	PITOT STATIC SW L	TAIL FAN FAIL
HYD SYS TEST VLV CLSD	FIRE DETECTION FAIL L	RUDDER LIMIT L	WEIGHT ON WHEELS
HYD UNLOAD VLV A	FUEL SCAVENGE FAIL L	RUDDER LIMIT FAIL L	WINDSHIELD BLD AIR VLV
NOSE FAN #1	FUEL TANK TEMP L	SPOILERS DEPLOYED L	XFEED BUS SOURCE
AC BEARING L	FUEL FLOW L	SLATS STOWED L	
ANTI-ICE ENG FAIL L	FUEL LEVEL LOW L	SLATS DEPLOYED L	
ANTI-ICE ENG ON L	FUEL PRESS LOW L	STATIC HEATER #2 L	
	FUEL BOOST PUMP ON L	STATIC HEATER #1 L	

Some messages will be masked, removed, or delayed from being displayed under certain conditions. This helps to keep the CAS screen as clean as possible. Allowing certain messages to appear only when they are meaningful helps to reduce crew workload, and helps to reduce crew complacency which could develop due to CAS messages constantly appearing on the screen at times when they might have only marginal meaning.

Some examples of this inhibit logic are discussed below.

When the system detects idle cutoff (TLA <8° and the FADEC declares engine not running) on either engine, certain messages will be replaced with the cyan CAS message "ENGINE SHUTDOWN L-R" after a very slight delay. This message provides less distraction to the crew when an engine is shutdown. Also, when the throttles are not in cutoff and the FADEC declares the engine incapable, a red CAS message "ENGINE FAILED L-R" will be displayed. The table below presents the CAS message affected by this logic.

Message	Engine Failed	Engine Shut Down
AC BEARING L-R	YES	YES
BAGGAGE DOOR SEAL		YES
CABIN DOOR SEAL		YES
CHIP DETECT	YES	YES
DC BEARING L-R	YES	
ENG TLA FAILED L-R	YES	YES
ENG TR SW FAULT L	YES	YES
ENG TR SW FAULT R	YES	
ENG VIB L-R (amber)	YES	YES
ENG VIB L-R (red)	YES	YES
ENG FAILED L-R		YES
FADEC BUS FAIL L-A	YES	YES
FADEC BUS FAIL L-B	YES	YES
FADEC BUS FAIL R-A	YES	YES
FADEC BUS FAIL R-B	YES	YES
FADEC FAIL L A-B	YES	
FADEC FAIL R A-B	YES	
FADEC REV ADC-N1L	YES	
FADEC REV ADC-N1R	YES	
FAN DAMAGE	YES	
FUEL BOOST ON L-R (amber)		YES
FUEL BOOST ON L-R (white)		YES
FUEL PRESS LOW L-R	YES	YES
FUEL TEMP L-R	YES	YES
GEN OFF L-R (amber)		YES

(Inhibit Logic Table Continued Next Page)

(Inhibit Logic Table Continued)

Message	Engine Failed	Engine Shut Down
GEN OFF L-R (red)		YES
HYD PUMP FAIL A-B (amber)		YES
HYD PUMP FAIL A-B (red)		YES
OIL LEVEL LOW L-R	YES	YES
OIL PRESS LOW	YES	YES
START VLV OPEN L-R		YES
TR AUTOSTOW (amber)		YES
TR AUTOSTOW (red)		YES
WSHLD HEAT INOP L		YES
WSHLD HEAT INOP R		YES

Some CAS messages have a built in delay before they are displayed. This designed hysteresis prevents nuisance messages which would otherwise occur during valve transients and other momentary occurrences due to system reconfiguration etc.

Some CAS messages are restricted to being shown when the airplane is on the ground, and others pertain only to flight.

TAKEOFF PHASE INHIBIT (TOPI) AND LANDING PHASE INHIBIT (LOPI)

During the critical phases of flight represented by takeoff and landing, in order to minimize crew distraction and work load, as well as for reasons of safety, a majority of CAS messages are inhibited. Any messages that are currently displayed will not be removed by TOPI or LOPI, and any message that has not been acknowledged can still be acknowledged.

The following table lists the operations that are not inhibited by TOPI or LOPI modes.

TOPI	LOPI
ANTISKID FAIL	ALL REDs
APU FIRE	AUTOPILOT (aural)
DUAL GEN FAILURE	MINIMUMS (aural)
ENGINE FIRE L-R	LANDING GEAR (aural)
ENGINE FAILED L-R	SPEED BRAKES
TR AUTOSTOW	YD FAIL UPPER RUDDER A. B
NO TAKEOFF	

NO TAKEOFF ANNUNCIATION

There are certain conditions of airplane configuration and/or equipment malfunctions which will cause a NO TAKEOFF CAS message. If these conditions are present, but there is no intent (i.e., throttle position, etc.) to take off, the message will be CYAN in color and will be advisory in nature. If at least one throttle is placed to a throttle lever angle (TLA) greater than 60 degrees, the message will change to a flashing RED EICAS warning, a flashing MASTER WARNING light and a steady CAS message on the cross-side MFD. The NO TAKEOFF warning cannot be muted by acknowledging the annunciation. The NO TAKEOFF audio (chime) warning is not cancelable, even though the flashing message and the master warning can be acknowledged, which will stop the flashing. The warning will otherwise stop only when the condition causing it is rectified.

AUDIO WARNINGS

Audio signals provided in the Citation X are composed of unique tones and some CAS messages (level 2 and 3) are preceded by a chimes. The level two conditions are preceded by a single chime and level three conditions are preceded by double chimes. Some other conditions are annunciated by distinctive warning horns. The audio chime tones provided upon the appearance of level two or three CAS messages are meant to draw attention to the fact that a message has appeared and they serve to indicate, by the number of chimes, the level of seriousness. Also, some aural warnings (i.e., WINDSHEAR), do not have complementary visual CAS or MFD annunciations. The level of audio output from the integrated avionics computers increases in four steps as a function of dynamic pressure (Q) sensed by the system, in order to guarantee that the audio messages will be audible in all flight regimes.

Aural Priorities

The aural prioritization for the Primus 2000 system installed in the Citation X is:

1. WINDSHEAR
2. GROUND PROXIMITY WARNING SYSTEM (GPWS)
3. TRAFFIC and COLLISION ALERTING SYSTEM (TCAS)
4. ENGINE INDICATING and CREW ALERTING SYSTEM (EICAS) CHIMES

Each system has the capability to mute or inhibit the subordinate systems. For example WINDSHEAR will inhibit the two remaining aural systems.

In the Citation X occurrence of conditions which produce different unique tones are the following: altitude deviation ±250 feet, altitude alert ±1000 feet, abnormal autopilot disconnect, and decision height altitude. The landing gear warning horn and the V_{MO}/M_{MO} overspeed warning horn also produce distinctive aural warnings. A trim-in-motion clacker will also sound during autopilot trimming, if the autopilot trims longer than a minimum set time.

The following table lists those CAS messages, their level, and the tone configuration.

CAS Message	Level	Tone
ENGINE FIRE L	3	Double Chime
ENGINE FIRE R	3	Double Chime
ENGINE FAILED L	3	Double Chime
ENGINE FAILED R	3	Double Chime
TR AUTOSTOW L-R	3	Double Chime (Note 1)
RUDDER LIMITER FAIL	3	Double Chime
APU FIRE	3	Double Chime
BAGGAGE SMOKE	3	Double Chime
CABIN SMOKE	3	Double Chime
CABIN ALTITUDE	3	Double Chime
HYD PUMP FAIL A-B	3	Double Chime (Note 1)
HYD O'TEMP A-B	3	Double Chime
OIL PRESS LOW L	3	Double Chime
OIL PRESS LOW R	3	Double Chime
BATTERY O'TEMP 1-2	3	Double Chime
PYLON BLEED LEAK L-R	3	Double Chime
ENG VIBRATION L-R	3	Double Chime
GEN OFF L-R	3	Double Chime (Note 1)
NO TAKEOFF	3	Double Chime
AUTO SLATS FAIL	3	Double Chime
CHECK PFD	3	Double Chime
EMERGENCY DESCENT	3	Double Chime
MASTER WARNING *	-	Chime

* Denotes non-CAS message

Notes:
1. Single chime for left or right
2. Non-repeating single chime
3. Autopilot unique tone
4. Unique tone (all unique tones are different)
5. Distinctive warning horn
6. Distinctive stand alone horn
7. Distinctive trim-in-motion clacker
8. The double chimes repeat until acknowledged

(CAS Messages Table for Tone Configuration, Continued Next Page)

CAS Messages Table for Tone Configuration (Continued)

CAS Message	Level	Tone
AP OFF - Abnormal	2	Note 3
PRI STAB TRIM FAILURE	2	Note 2
YD FAIL	1	Note 2
AP OFF Normal*	1	Note 2
MASTER CAUTION *	-	Chime
ALTITUDE DEVIATION±250' *	-	Note 2
ALTITUDE ALERT ±1000' *	-	Note 4
VERTICAL TRACK ALERT *	-	Note 2
Decision Height *	-	Note 2
LANDING GEAR *	-	Note 5
SEL-CAL	0	Note 2
OVERSPEED *	-	Note 6
TRIM IN MOTION *	-	Note 7

* Denotes non-CAS message

Notes:
1. Single chime for left or right
2. Non-repeating single chime
3. Autopilot unique tone
4. Unique tone (all unique tones are different)
5. Distinctive warning horn
6. Distinctive stand alone horn
7. Distinctive trim-in-motion clacker
8. The double chimes repeat until acknowledged

ROTARY TEST SWITCH

The rotary test switch has functions which interface with the crew alerting system (CAS), and which are tested in the various positions of the switch. For information concerning these CAS messages refer to Rotary Test Switch in Section Two of this Manual.

PRIMUS 2000 PILOT'S MANUAL

The engine indicating and crew alerting system (EICAS) is part of the Primus 2000 avionics system. For a more detailed list of all possible CAS messages and conditions which will cause their annunciation, as well as for further detailed and specific information concerning the EICAS system, refer to the Primus 2000 Pilot's Manual for the Primus 2000 Integrated Avionics System and Flight Control Systems for the Citation X - Publication Number A28-1146-104-04, or appropriate revision. When the Citation X, equipped with the Primus 2000 Integrated Avionics System and Flight Control System is being operated, the above manual must be immediately available to the flight crew.

ALPHABETIC LIST OF CAS MESSAGES

In the following list: A = Amber, C = Cyan, R = Red, and W = White.

C AC BEARING L-R
W ACFT MAINTENANCE
C AILERON RATIO LOW
A ANTI SKID FAIL
A AOA HEAT FAIL L-R
A AOA PROBE FAIL L-R
A AP STAB TRIM INOP
R APU FIRE
W APU ON
R AUTO SLATS FAIL
A AVN HOT BAG - NOSE
W AVN MAINTENANCE
A BAGGAGE ALTITUDE
A BAGGAGE DOOR OPN
A BAGGAGE DOOR SEAL
R BAGGAGE SMOKE
R BATT 1-2 O'TEMP
A BUS CRTL 1-2 FAIL
W BUS ISO OPEN L-R
R CABIN ALTITUDE
A CABIN ALTITUDE
A CABIN DOOR OPEN
A CABIN DOOR SEAL
A CABIN PAC O'TEMP
A CBN VENT DOOR OPN
A CHECK AP ENGAGE
A CHECK DU 1-2-3-4-5
R CHECK PFD
W CHECKLISTMISMATCH
A CHIP DETECT L-R
A COCKPIT PAC O'TEMP
A CONFIG MISMTCH 1-2
A CTR XFER OFF L-R
A CTR XFER XSIT L-R
C CVR FAIL
A DAU 1-2 MISCMP
A DAU 1-2 MISCMP-ENG
A DAU 1A-1B-2A-2B FAIL
A DAU ALL FAIL
C DC BEARING L-R-APU
A DC OVERCURRENTL-R
A DU 1-2-3-4-5 HOT
A DUCT O-TEMP CABIN
A DUCT O'TEMP CKPT
R EMERGENCY DESCENT
A ENG A/I COLD L-R
C ENG A/I COLD L-R
A ENG A/I HOT L-R
A ENG MTR VLV FAIL L
A ENG MTR VLV FAIL R
A ENG O'SPD SHUTDN L
A ENG O'SPD SHUTDN R

C ENG SHUTDOWN L-R
A ENG TLA FAILED L-R
A ENG TR SW FAULT L
A ENG TR SW FAULT R
A ENG VIBRATION L-R
R ENG VIBRATION L-R
R ENGINE FAILED L-R
R ENGINE FIRE L-R
A ESCAPE HATCH OPEN
A FADEC BUS FAIL L-A
A FADEC BUS FAIL L-B
A FADEC BUS FAIL R-A
A FADEC BUS FAIL R-B
A FADEC FAIL L A-B
A FADEC FAIL R A-B
A FADEC FAULT L A-B
A FADEC FAULT R A-B
A FADEC REV ADC-N1 L
A FADEC REV ADC-N1 R
A FAN DAMAGE L-R
C FDR FAIL
A FGC A-B FAIL
W FGC A-B MASTER
C FGC-ADC MISCMP
C FGC ATT MISCMP
C FIRE BOTTL LOW APU
C FIRE BOTTL LOW L-R
A FIRE DETECT FAIL A
A FIRE DETECT FAIL L
A FIRE DETECT FAIL R
A FLAPS FAIL
A FLEX MISCMP
C FLIGHT IDLE L-R
A FLT CONTROL FAULT
A FUEL BOOST ON L-R
W FUEL BOOST ON L-R
A FUEL DOOR OPEN
A FUEL FLTR BYPASS L
A FUEL FLTR BYPASS R
W FUEL FW VLV CLSD L
W FUEL FW VLV CLSD R
A FUEL FW VLV XSIT L
A FUEL FW VLV XSIT R
W FUEL GRV XFLWOPEN
C FUEL GRV XFLW XSIT
A FUEL IMBALANCE
A FUEL LEVEL LOW L-R
A FUEL MOTV FAIL L-R
A FUEL PRESS LOW L-R
A FUEL TEMP L-R
W FUEL XFEED OPEN
A FUEL XFEED XSIT
A FWC 1-2 FAIL
A GEN OFF L-R

R GEN OFF L-R
A GPWS FAIL
A GROUND IDLE L-R
A HP DUCT O'PRESS L
A HP DUCT O'PRESS R
A HP PCOOLR O'HT L-R

W HYD AUX PUMP ON
W HYD FW SHUTOFF A-B
A HYD O'TEMP A-B
R HYD O'TEMP A-B
A HYD PTU FAIL
A HYD PUMP FAIL A-B
R HYD PUMP FAIL A-B
A HYD PUMP UNLOAD A
A HYD PUMP UNLOAD B
A HYD VOLUME LOW A-B
A IAC 1-2 O'TEMP
A IAC BIT INOP 1-2
A ICE DETECTED
W ICE DETECTED
W IMT - AFCS ON
W IMT - IAS HIGH
W IMT - NO EFIS
W IMP - NO WOW
W IRS HI LAT ALN 1-2
C JBOX LIMTER OPEN L
C JBOX LIMTER OPEN R
W KEY NOT ACTIVE
A LATERAL MODE OFF
A CROSSTIE
C CROSSTIE
A MACH TRIM OFF
A NACELLE OPEN L-R
C NO TAKEOFF
R NO TAKEOFF
A NOSE DOOR OPEN L-R
A NOSE WHL STR INOP
C OIL FLTR BYPASS L
C OIL FLTR BYPASS R
A OIL LEVEL LOW L-R
R OIL PRESS LOW L-R
A P/S-RAT HEAT OFF
C P/S-RAT HEAT OFF
W PAC HI CKPT-CBN
W PAC HP VLV OPN L-R
C PARK BRAKE ON
A PARK BRAKE ON
A PARK BRK/LOW PRESS
A PITCH FEEL FAIL
A PITCH/ROLL DISC
A PITOT HTR FAIL L-R
A PITOT HTR FAIL SB
A PRI STAB TRIM FAIL

R PYLON BLEED LEAK L-R
A RAT HEAT FAIL L-R
A RAT PROBE FAIL L-R
C RAT PROBE FAIL L-R
C REMOTE CB TRIPPED
A RETRIM L-R WING DWN
A RETRIM NOSE UP-DWN
A RUD STBY SYS FAIL
A RUDDER LIMIT FAIL
R RUDDER LIMIT FAIL
W SATCOM CALL 1-2
A SEC STAB TRIM FAIL
W SELCAL HF 1-2 UHF
W SELCAL VHF 1-2-3
A SG 1-2 FAIL
A SLAT A/I COLD L-R
C SLAT A/I COLD L-R
A SLAT A/I HOT L-R
A SLATS ASYMMETRY
A SLATS FAIL
W SPEED BRAKES
A SPEED BRAKES
A STAB A/I COLD L-R
A STAB A/I HOT L-R
R STAB BLD LEAK L-R
A STAB TRIM MISCMP
A STALL WARN L-R
A START VLV OPEN L-R
A STATIC HT FAIL L-R
A TAILCONE BLD LEAK
A TAILCONE DOOR OPEN
A TOILET DOOR OPEN
C TONE GEN 1-2 FAIL
A TR AUTOSTOW L-R
R TR AUTOSTOW L-R
A VERTICAL MODE OFF
A WINDSHEAR FAIL
A WING A/I COLD L-R
C WING A/I COLD L-R
A WING A/I HOT L-R
C WING BLD LEAK L-R
A WING CUFF COLD L-R
A WING CUFF HOT L-R
A WING TANK O'FULL L
A WING TANK O'FULL R
A WSHLD HEAT INOP L
A WSHLD HEAT INOP R
A WSHLD O'TEMP L-R
A YD FAIL LOWER A-B
C YD FAIL LOWER A-B
A YD FAIL UPPER A-B
C YD FAIL UPPER A-B
A YD NOT CENTERED
A YD OFF LOWER

AREA NAVIGATION

P2000 FLIGHT MANAGEMENT SYSTEM

The FMZ Series P2000 Flight Management System is an integrated flight management system which receives input from various sensors, processes the information, and computes a composite airplane position from the data. It provides lateral steering information to the pilot through the electronic horizontal situation indicators (EHSI) in the primary flight displays (PFD) and through the selectable displays in the multifunction displays (MFD), and when connected to the autopilot, roll steering commands. It also provides vertical steering commands through the VNAV mode when the FMS (LNAV) is engaged as the NAV mode. In the Citation X, the vertical navigation mode operates only through the flight management system. The FMZ P2000 FMS also provides certain airplane performance information based on information contained in its memory bank and/or provided by the pilot for each flight. The system also provides navigation information outputs which enable display of the active flight plan on the PFD and MFD. The FMZ P2000 is installed as a standard dual system which operates in conjunction with the Primus 2000 Flight Guidance System.

The system uses inputs from VOR, DME, GPS (Global Positioning Satellite), and the inertial reference system (IRS) and/or a VLF/Omega system may be interfaced with the FMS. The navigation computer automatically selects the best navigation combinations of fixing (DME/DME, VOR/DME, GPS, VLF, IRS, etc.), based on a pre-defined priority, combined with qualitative selectivity of signals.

The FMZ P2000 consists of a color Control Display Unit (CD-810) and a navigation computer (NZ-2000). The standard Honeywell Global Positioning System (GPS), a separate sensor which supplies information to the navigation computer, increases the overland and overwater navigation capacity and provides navigation capability outside the range of reception of VOR and DME facilities.

The navigation database must be updated every 28 days. A DL-900 data loader (provided standard with the airplane) must be used, with current software, to update the FMS. Pilot entered individual flight plans that have been stored are not affected by the data base, and are not entered into it. They must be separately amended or deleted.

The CD-810 color control display unit (CDU) enables the pilot to interface with the system. It provides the display for navigation and performance computations and, through its alphanumeric keyboard, provides access to the system for inserting flight plans, giving navigation commands and extracting information from the system, etc. The alphanumeric keys make entries only to the scratchpad at the bottom of the CDU display. There are CDU keys for the numbers 0 to 9, a decimal, a dash, and a slash. There is also a delete key (DEL), a clear key (CLR), and a period. The scratchpad is a working area where the pilot can enter and verify data before selecting the data to its proper position. The scratchpad also displays advisory and alerting messages. Its first priority is the display of alerting messages, followed by advisory messages, the delete function, and finally entries from the keyboard or line select keys.

Through the color coding of the CDU display it is possible to highlight and differentiate information for immediate recognition. Vertical and atmospheric data are colored cyan (dark blue), lateral navigation information and index selections are green, FROM waypoints are yellow, TO waypoints are magenta, prompts and titles are white, and flight plan names are displayed in orange.

P2000 CONTROL DISPLAY UNIT (CDU)

A5306

6285P6085

Figure 3-40

There are four line select keys on each side of the CDU. Data is selected to a line from the scratchpad, or vice-versa, through the use of the line select keys. These keys are identified from top to bottom as 1L through 4L on the left side and 1R through 4R on the right side. When an index is displayed, for example, the line select keys are used to select functions from the index displayed on the CDU. In displays other than indices, the bottom line select keys (4L and 4R) are primarily used for direct access to other functions in the FMS system.

Six annunciators are located along the top of the CDU. They operate independently of the cathode ray tube (CRT) readout and the keyboard. They display advisory (amber) and alerting (white) messages

A brightness control is located on the face of the CDU. Overall brightness of the CRT may be selected and the selected brightness will be maintained, under different lighting conditions, by automatic photo sensors.

The FMZ P2000 system is powered up when electrical power is available and the avionics master switch is ON.

AUTOTUNING

In various aircraft the system of autotuning the navigation radios (and sometimes other avionics) by the flight management system is treated in different ways. For this reason the following specific information concerning the Citation X is provided. In the Citation X there are no external autotuning switches to enable or disable the autotuning function; it is controlled through the FMS CDU or the radio control head only. If the FMS is selected on the SC-840 for navigation, the FMS system will autotune unless it is disabled to prevent it from doing so, or unless the pilot has tuned the NAV radios through the FMS or from the radio control head. The FMS will not autotune a frequency that the pilot has selected. It will also not autotune when the preview (PRE) mode has been selected. The left FMS autotunes the left (pilot's) radios and the right FMS autotunes the right (copilot's) radios. There is no “cross-selection” of autotuning.

The last three lines of the RADIO TUNING page on the CDU are dedicated to the VOR and DME (NAV) radios. The currently tuned frequencies and VOR identifiers for those radios are displayed under the headings NAV 1 and NAV 2. The same display and functions are also displayed on page one of the PROGRESS page.

When the FMS is using VOR and DME data for navigation, a U appears in front of the Navaid identifier on the VOR/DME page. The small letter in front of the NAVAID identifies in the lower part of the RADIO TUNING page indicates the tuning mode for the NAV radios (VOR and DME). If the letter T is displayed, the FMS is tuning the station and verifying the data from the NAVAID before it starts using the station to compute the airplane’s positions

The following tuning modes exist: A (auto tune), V (VOR tune), R (remote tune), and M (manual tune).

To prevent the FMS from using a VOR/DME radio, use the DEL key. Enter *DELETE* in the scratchpad, then push a line select key to the left of any identifier displayed on the VOR/DME page The FMS displays DESEL above all three identifiers on the page signifying that the FMS cannot use that radio for position computations. The same procedure is used to reselect the radio for autotuning.

The display of the letter M on the CDU radio tuning page, beside the pertinent NAV, indicates that manual tuning has been selected. The letter A displayed in front of the station identifier indicates that the receivers are being autotuned by the FMS. Regardless of the tuning mode, the FMS is constantly tuning the scanning channels of the DME for position update.

Operator's Manual

For detailed operating information, consult the Honeywell FMZ Series Flight Management System Pilot's Operating Manual, Publication Number A28-1146-043-02 dated January 2001 , or later revision for FMS software version 5.1.

Limitations

A single installation of the Honeywell FMS is not approved as a sole means of navigation; therefore, if one of the dual FMSs is inoperative or removed and a single FMS is to be used as the primary means of navigation, or when an FMS (without a backup) is coupled to the autopilot, flight director or EHSI, the navigation equipment required by the FARs applicable to the specific type of operation being conducted, must be installed and operating. Dual installations of the FMZ P2000, as installed in the Citation X, are not approved as a sole means of navigation. Refer to the applicable supplement to the airplane flight manual for additional limitations and operating information.

HONEYWELL AIRBORNE FLIGHT INFORMATION SYSTEM (AFIS) (OPTIONAL)

The Global Airborne Flight Information System (AFIS) interfaces the flight planning and performance management functions of the Honeywell FMZ-800 Flight Management System with Global Data Center Computers, by means of the Aircraft Communications Addressing and Reporting System (ACARS). ACARS provides the computer data link between the airplane and the Global Data Center, by which transfer of digital data concerning flight plan, weather, and message traffic is possible.

The Model 750 AFIS installation consists of a Data Management Unit (DMU), a configuration module, and an antenna. An AFIS with SATCOM sensor is also available. If the SATCOM option is installed, a satellite communications unit (SCU), an additional antenna for satellite communications, and an amplifier are also installed. The FMS DL-900 data loader is the disk interface for the AFIS functions, and the FMS control display unit (CDU) provides access for the AFIS function through the NAV index. The AFIS function replaces the DATA BASE function (2R) on page one of the NAV INDEX when the system is installed and configured. The Global Data Center and ACARS, with its VHF/ground telephone system interface, make up the ground portion of the system. The global data system provides the services of flight planning, aviation, weather, and flight related message forwarding, through its "mainframe" computers which accept and process digital data, and provide the requested information on a real time basis.

Operator's Manual

For detailed operating information, consult the Airborne Flight Information System (AFIS) (Optional) information in the Honeywell FMZ Series Flight Management System Pilot's Operating Manual, Pub. No. A28-1146-127-02 dated January 2001, or later revision.

ALTITUDE ALERTING AND REPORTING

Altitude data for both altitude alerting and reporting is obtained from the micro air data computers (MADCs). The coded uncorrected (mean sea level) altitude information provided by the MADCs is passed on by the transponders to the air traffic control system, which decodes the information and presents it on the controller's radar screen. For a complete description of the altitude reporting system refer to Transponders, in this section.

Desired altitude for both primary flight displays (PFDs) for altitude alerting, (or for ALT SEL operation), is set by using the center knob (ALT SEL) on the copilot's RI-871 remote instrument controller which is located on the center pedestal. When turned at one click at a time the data increments or decrements at 100 foot increments. When the knob is turned at a faster rate the data changes in large increments. Clockwise operation increases the value; counterclockwise decreases it. The selected altitude appears in the altitude alert box which is located at the top of the altitude display on the PFDs. The set data is cyan under normal circumstances. The digits are boxed when the airplane is within the altitude alert operating region. When departing a selected altitude, the select display and the box turn amber.