LANDING GEAR

DESCRIPTION

The landing gear is tricycle type with two wheels on each gear strut. Each unit retracts into its own well and is fully covered by doors, mechanically connected to the landing gear.

Landing gear extension and retraction time is 9 ± 1 seconds. In emergency, landing gear may be extended by compressed nitrogen.

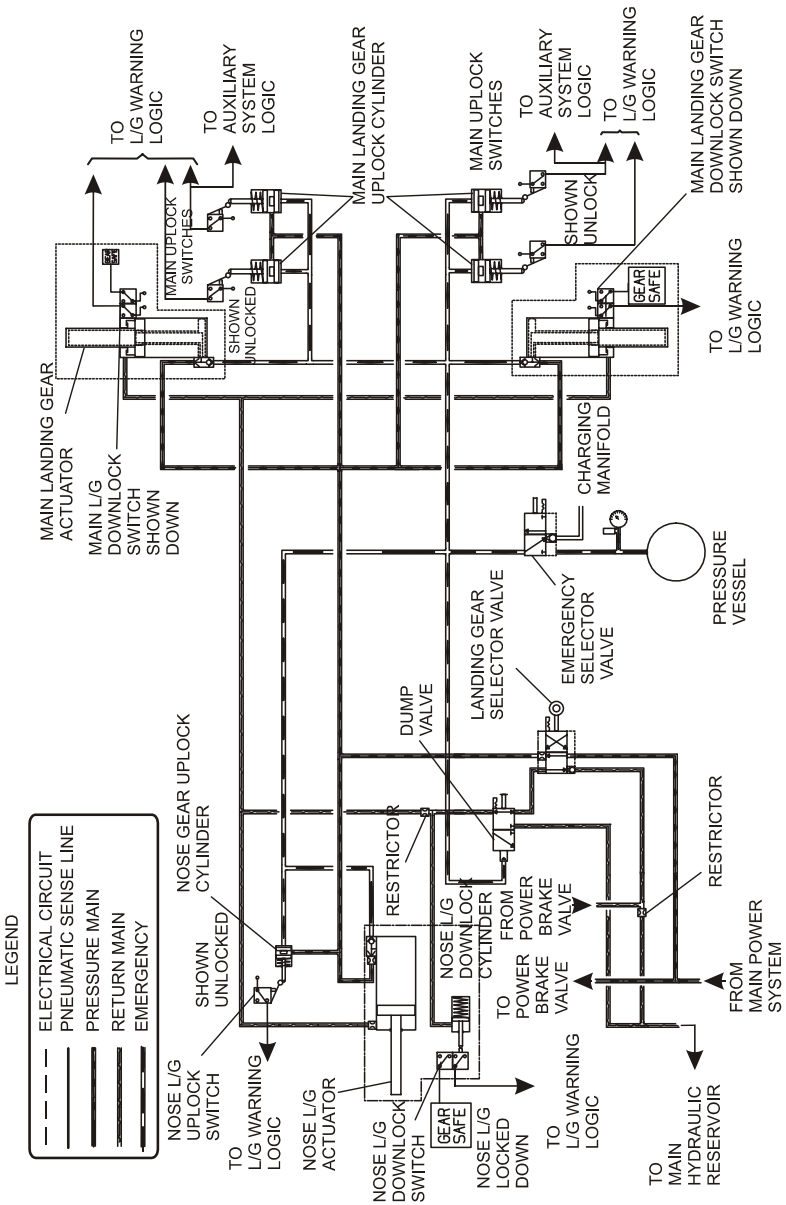

Figure 7-32-1. Landing Gear - Schematic

MAIN LANDING GEAR (MLG)

Each MLG wheels are mounted on a trailing beam pivoted on the MLG strut. Its shock absorber is pin-connected at both ends, absorbing the beam energy and transmitting the ground loads to the upper portion of the MLG structure.

The ground loads are reacted by the wing structure by the journal bearings mounted coaxially in the wing, chordwise direction, and by the bracing actuator attached to the MLG strut.

The MLG retracts inwards into the fuselage wheel well. Each MLG has two doors. The outboard door is rigidly attached at the strut. The inboard door operates by mechanical linkage to the strut and is held in up position by two uplock cylinders. This uplock is released when landing gear lever is placed in down position by hydraulic pressure, or by nitrogen pressure in emergency. The MLG is held, while airborne, in retracted position by hydraulic pressure in the actuator and by the inboard door mechanical uplock, if pressure drops.

As the gear is extended, an internal lock in the actuator automatically locks it in fully extended positions.

The MLG actuator also serves as the gear brace. The downlock is released when landing gear lever is placed in UP position by hydraulic pressure.

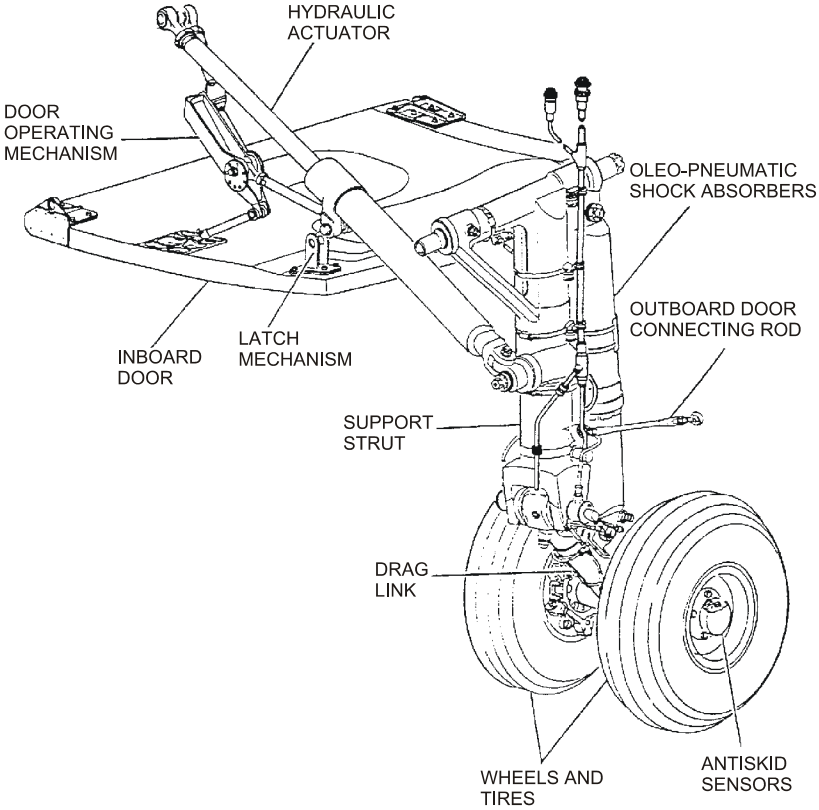

Figure 7-32-2. Main Landing Gear - Schematic

NOSE LANDING GEAR (NLG)

The NLG strut is cantilevered, sliding telescopically in a rotating tube. The rotating tube is positioned by a couple of steering cylinders installed in the wheel well by means of universal joint, the axis which coincides with the NLG retraction axis. The steering movement is transmitted to the wheel axle by torque links which can be disconnected for ground towing angles beyond the steering angle range. (± 60°).

The NLG retracts forwards and locks up by means of a spring-loaded snap type mechanical lock.

A hydraulic actuator is connected on one end to the NLG strut and on the other end to the upper arm of the drag brace. The drag brace is provided with positive mechanical lock (installed on the brace apex) which locks automatically in fully extended position, in addition to the geometrical over-centering of the brace.

A hydraulic actuator, installed in the drag brace unlocks the mechanical downlock, enabling the retracting actuator to release the brace from the geometrical lock to retract the NLG.

When aircraft is airborne, NLG is centered by springs of the steering system, while the hydraulic power is out.

The universal joint allows retraction only with the NLG centered and does not allow any movement of the rotating tube while the NLG is not extended.

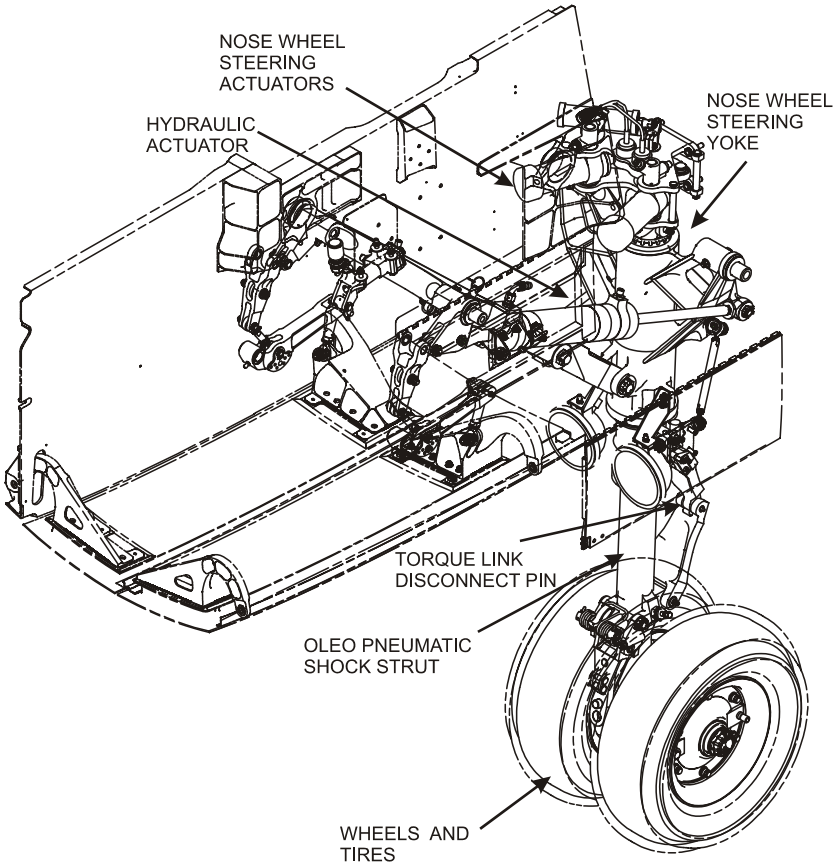

Figure 7-32-3. Nose Landing Gear - Schematic

EMERGENCY GEAR EXTENSION

Emergency extension of the landing gear requires actuating the emergency gear DOWN handle (on left side of the pedestal), releasing compressed nitrogen to drive the landing gear into down & locked position, and opening a valve to direct the upward hydraulic pressure to the return line this enables landing gear extension even if landing gear lever is stuck in UP position.

Once the gear emergency DOWN handle is pulled, landing gear must not be retracted again.

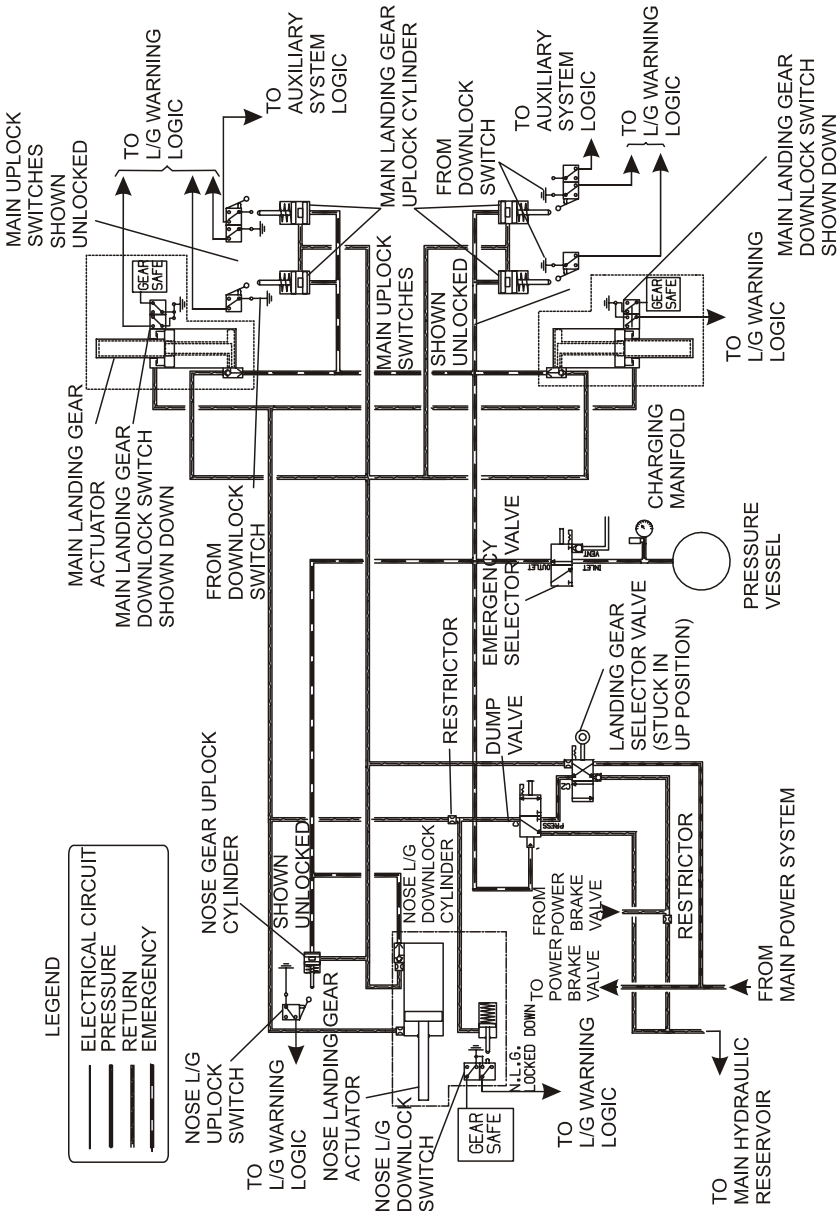

Figure 7-32-4. Emergency Gear Extension - Schematic

LANDING GEAR – WARNING LOGIC

GEAR NOT DOWN message is armed as long as any landing gear is not down and locked. The aural warning “GEAR” sounds when one of the following conditions exist:

1. Flaps are extended beyond 30° (aural warning cannot be deactivated)
2. Radio altitude is below 400 feet and one of the power levers is retarded to less than 100° (aural warning cannot be deactivated)
3. One power lever is retarded to less than 100° and right or left IAS is below 158 KIAS (radio altimeter inoperative)

When condition No. 3 exists, the aural warning can be deactivated by momentarily pressing the master warning caution button.

NOSE WHEEL STEERING

The nosewheel steering (NWS) system is an electro-hydraulic servo system controlled by an electronic control unit (ECU). The ECU is located in the left AFT radio rack.

The NWS is controlled by steering control wheel on left pilot console, below the window. The two actuators enable steering to 60° either side of center, for taxiing. The pilot and copilot can steer up to 3° either side of center with the rudder pedals. Pip-pin must be inserted in nosewheel scissors before taxiing.

Steering sensitivity is controlled by the steering control rotation angle. Low rotation force gives low sensitivity (slow reaction) high rotation force gives high sensitivity (fast reaction). Rudder pedals steering can be disconnected using NWS DISCONNECT switch.

For towing, the pin must be removed to allow nosewheel rotation greater than 60° either side of center. When the aircraft is airborne, the steering system is disabled and a centering spring centers the nosewheel before gear retraction.

If main hydraulic system pressure fails during landing or taxiing, hydraulic pressure switch in steering control valve, opens bypass valve, permitting free interflow of hydraulic fluid between parts of the actuators. The resultant equalization of pressure between the actuators permits aircraft to be steered by differential braking. The steering actuators and control valve provide nosewheel shimmy damping when normal steering system is not used.

The system has a built-in test (BIT) capability. NWS INOP message comes on when nosewheel is down and locked and nosewheel steering system is off or not aligned.

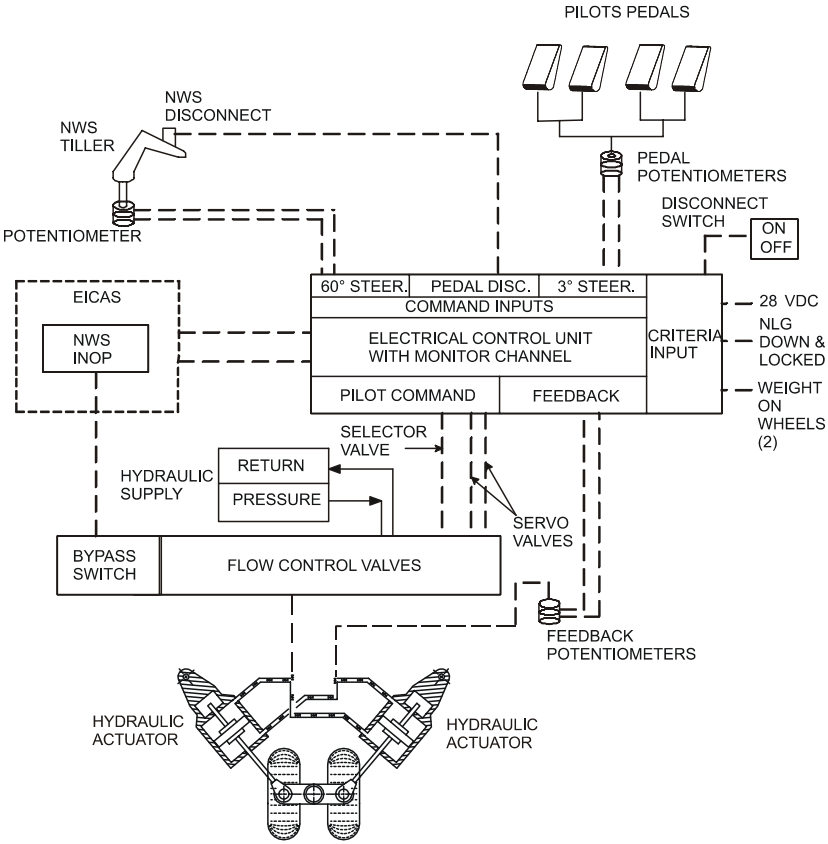

Figure 7-32-5. Nose Wheel Steering - Schematic

LANDING GEAR SYSTEM CONTROLS AND INDICATORS

Landing gear control lever - Located on landing gear control panel on center instrument panel.
It retracts and extends landing gear. Two positions: UP and DOWN.

Three green indicator lights: LEFT, NOSE, and RIGHT - Each light comes on when respective gear is in down and locked position.

Red unsafe light - Located inside wheel-shaped handle of landing gear control lever. The light indicates unsafe landing gear condition. Comes on when landing gear is in transit and remains illuminated until all three landing gears are locked in either UP or DOWN position.

HORN button - Tests landing gear warning.

DOWNLOCK OVERRIDE button - Energizes solenoid of downlock plunger if ground contact switch fails.

Warning Messages

GEAR NOT DOWN 🔈 - Landing gear is not down and locked with radio altimeter altitude less than 400 ft and one power lever at or below max. cruise or flaps position more than 30º

Caution Messages

NWS INOP - Nosewheel is down and locked and nosewheel steering system is off or not aligned

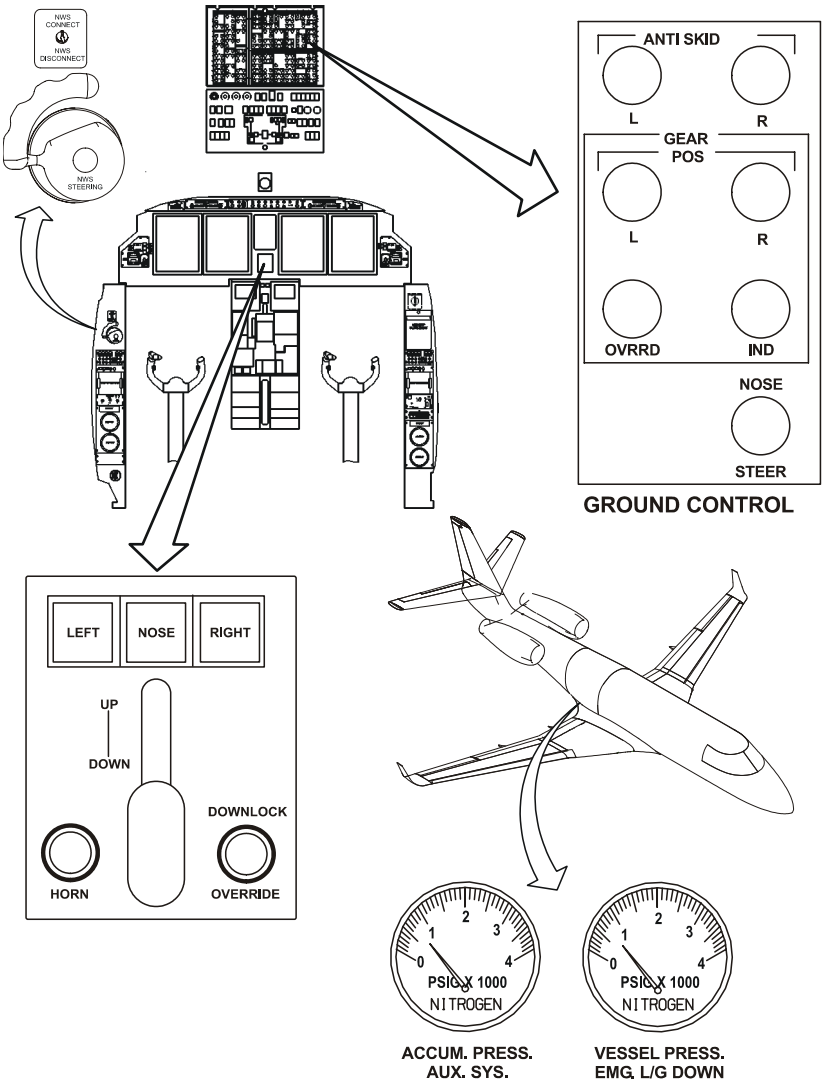

Figure 7-32-6. Landing Gear Controls and Indicators

WHEEL BRAKES SYSTEM

Normal and emergency hydraulic wheel brake systems are controlled by conventional, dual, “tip-toe” brake pedals which actuate multi-disk self-adjusting brake units on each of the four MLG wheels. Normal operation of the brakes on each MLG strut is controlled by an anti-skid valve.

Pressure from the auxiliary hydraulic system is supplied for emergency braking, through shuttle valve, bypassing the anti-skid valve to one-half the braking power of the aircraft. The power brake valve enables differential braking with both normal and emergency brakes.

The main and auxiliary hydraulic systems are separated by hydraulic fuse and shuttle valves, preventing loss of fluid from both systems with any failure in the brake system.

Selection of emergency braking is executed by placing PARK/EMERG lever in EMERG position and pressing brake pedals. Parking operation is achieved by placing the PARK/EMERG lever in PARK position by directing hydraulic pressure from either the accumulator or auxiliary system to the brakes.

Emergency braking and parking is done with only half the normal braking power. (Three braking pistons per wheel instead of six). Also, anti-skid is not available with emergency braking.

During landing gear retraction, hydraulic pressure in the return lines causes automatic braking of the main wheels, to stop wheels rotation.

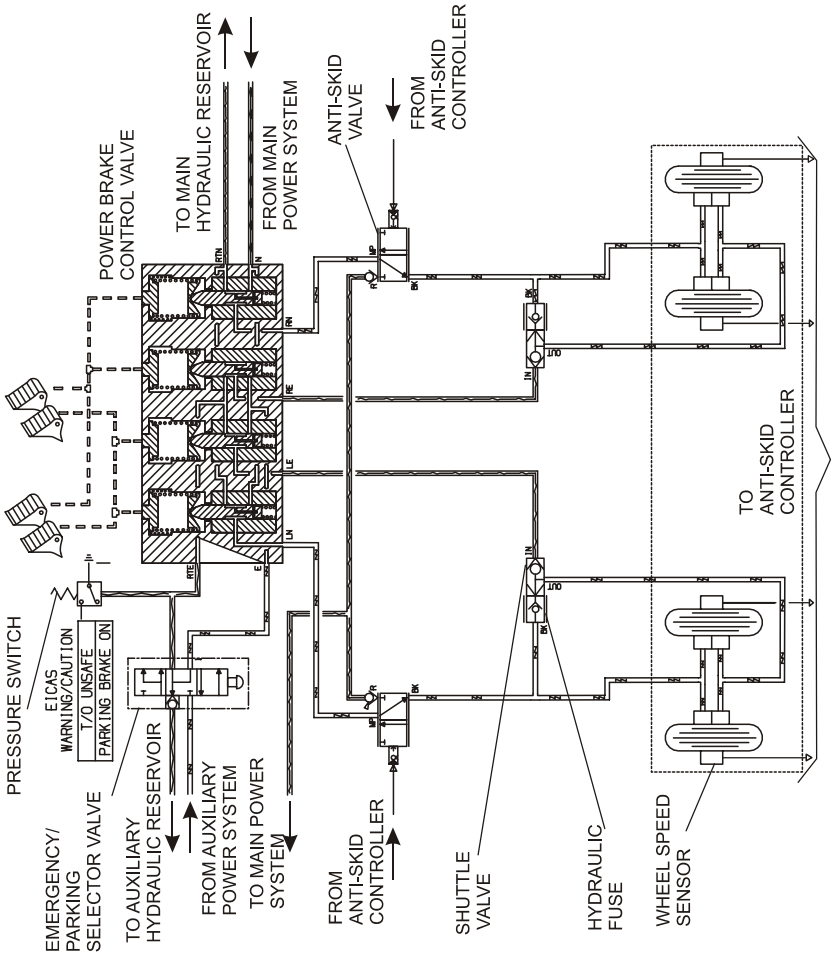

Figure 7-32-7. Wheel Brakes System - Schematic

WHEEL BRAKES CONTROLS

EMER/PARK BRAKE lever - Has three positions:

EMERG - Wheel brake pressure comes from the auxiliary hydraulic system or the auxiliary hydraulic accumulator. Braking action is reduced to 50%.

OFF - Parking or emergency braking systems are off.

PARK - Constant hydraulic pressure is applied to wheel brakes.

Warning Messages

CONFIG PARKING 🔈 - Aircraft on ground, both engines thrust beyond 70% N_1 and parking brake engaged

Caution Messages

GND BRK WOW MISCOMP - Ground-brakes-weight on wheels switches miscompare

Advisory Messages

PARKING BRAKE ON - Parking brake lever is in PARK position and adequate hydraulic pressure sensed at the brakes

NOTE

Minimum of 140-170 psi hydraulic pressure must be sensed at the brakes for PARKING BRAKE ON message to come on.

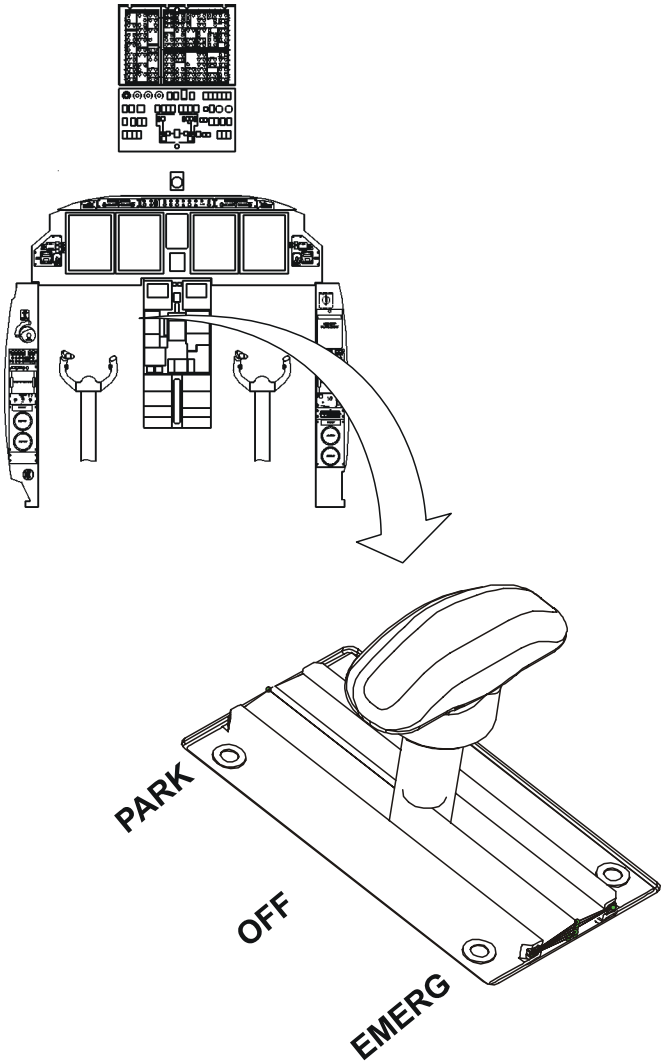

Figure 7-32-8. Emergency / Parking Control

ANTI-SKID SYSTEM

Anti-skid system prevents wheel skidding by limiting application of main hydraulic system pressure to brakes, thereby permitting shorter landing roll and minimizing tire wear. Maximum braking efficiency is obtained when all wheels are at maximum rate of deceleration short of a skidding wheel. Wheel speed detectors transmit electrical signals to system control box which sends corresponding signals to anti-skid control valves, causing the control valves to continuously vary brake pressure as required. In flight, and if wheel contact with ground is not firmly stabilized, brake system is rendered inoperative.

Main system components are: control box, two control valves, four wheel speed detectors, parking motor shutoff valve and control and indicating unit.

Electrical power of 28 Vdc is supplied by No. 1 and No. 2 distribution buses through ANTI-SKID L & R circuit breakers, respectively. System operation is controlled by ANTI-SKID L and R pushbuttons that also serve as system caution lights. System test may be made with landing gear down and locked and ANTI-SKID pushbutton OFF; L and R OFF lights come on. Anti-skid must be ON before take-off and landing.

The system operates when any wheel slows to less than 30% of the other wheel by modulating hydraulic brake pressure.

During normal operation L or R OFF caution lights come on when landing gear is down and locked, ANTI-SKID pushbutton is ON and there is an electrical failure in anti-skid control system. Lights also come on when the control system produces full brake release signal for more than one second or there are faults which could cause a main wheel lock-up during deceleration. If light(s) come on, pilot must press the switch to OFF to deactivate the system. Anti-skid system is inoperative when aircraft speed is 10 kt or below.
The system is self-tested during landing gear extension and by pressing ANTI-SKID pushbutton OFF and ON, verifying that the ANTI-SKID and OFF lights are on, respectively

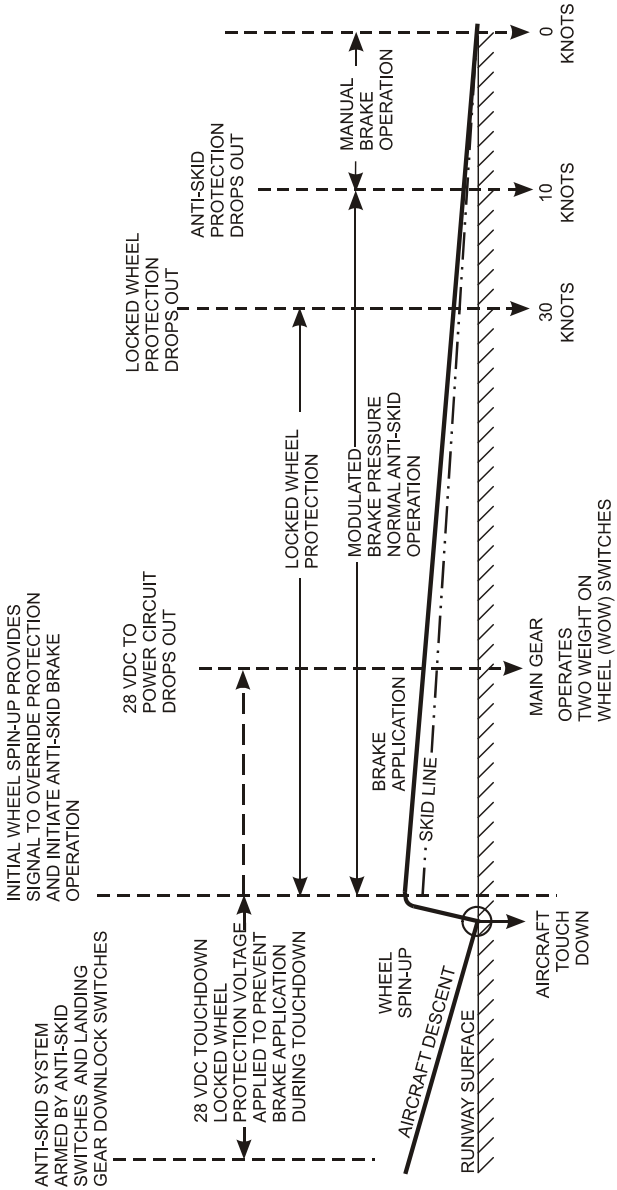

Figure 7-32-9. Anti-Skid Operation Logic

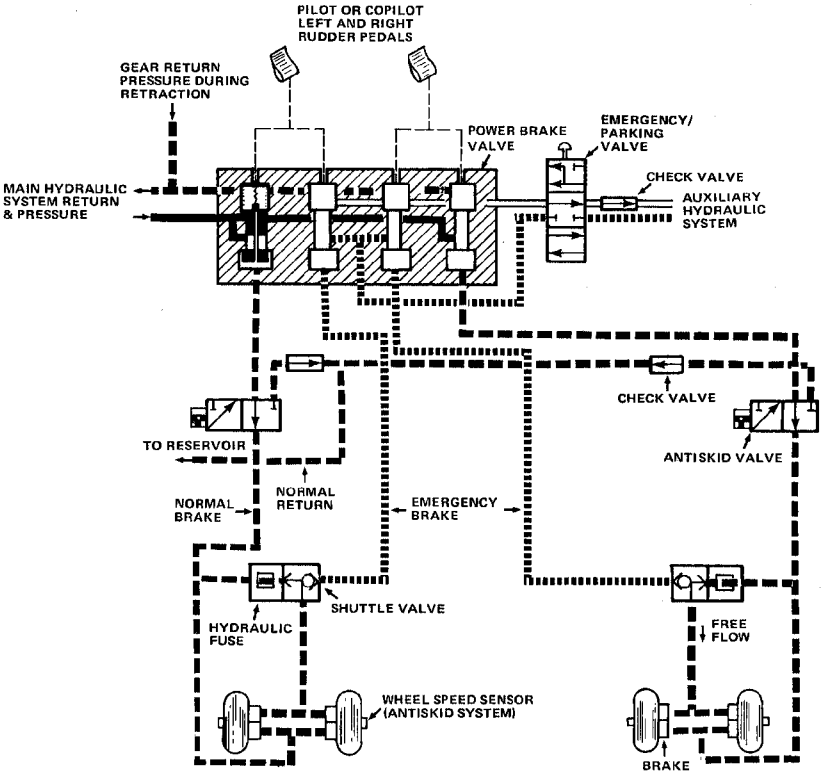

Figure 7-32-10. Anti-Skid System - Schematic

ANTI-SKID SYSTEM CONTROLS AND INDICATORS

ANTI-SKID pushbuttons - Located on pilot glareshield. They each have two positions as follows: Pressed off - Anti-skid system is off. (ANTI-SKID and the OFF lights are on). Pressed on - Anti-skid system is energized on ground. The switch is left on during flight. Main gear downlock switch removes power from anti-skid system after take-off. Pilot and copilot pushbuttons are interconnected; last button pressed switches the system on or off.

L and R OFF caution lights - During normal operation ANTI-SKID L and/or R caution light(s) come(s) on when main gear is down and locked and:

1. ANTI-SKID pushbutton is pressed OFF.
2. Electrical failure exists in control system.
3. Control system produces full brake release signal for more than one second.
4. Fault exists which may cause lock-up of one main wheel during deceleration.

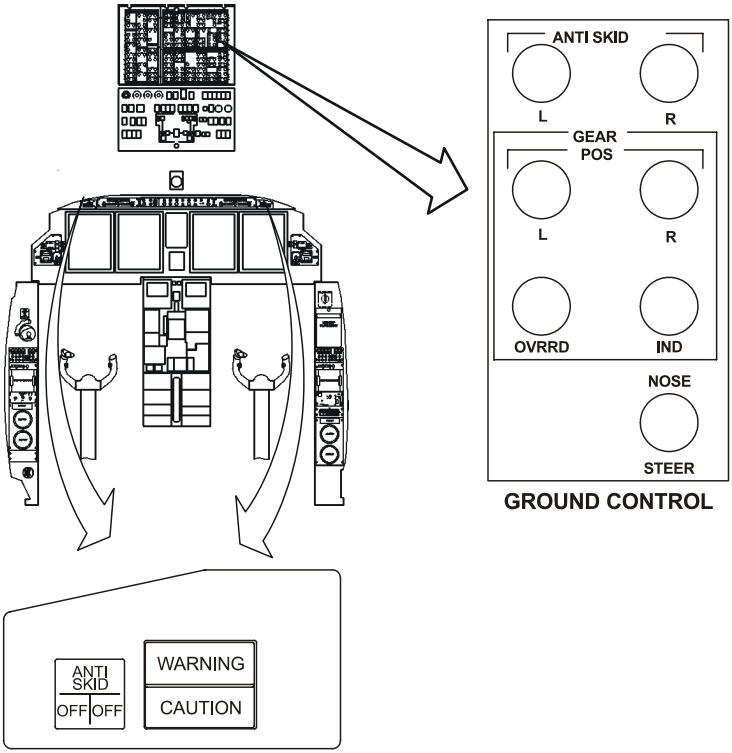

Figure 7-32-11. Anti-Skid System Controls and Indicators