2A-49-10: Auxiliary Power Unit (APU) General

The Auxiliary Power Unit (APU) is a turbine engine composed of one compressor stage and two turbine stages with accessory mountings for a forty (40) KVA generator and Load Control Valve that provides compressor pressurized air for the aircraft pneumatic system bleed air supply manifold. The APU allows the aircraft to operate independently without requiring a ground air cart and external AC / DC power to start the aircraft engines. The APU also provides the ability to operate the air conditioning packs to cool or heat the aircraft interior without the necessity of starting the engines while preparing for departure. During flight, the APU can be used as a backup electrical power supply if a malfunction renders one or both aircraft engine generators inoperative. Additionally the G550 APU can be used to supply the air conditioning packs on takeoff up to an altitude of fifteen hundred feet Above Ground Level (1,500 ft AGL), preserving full engine thrust for maximum takeoff performance. If necessary, APU air may also be used to assist in airstarting an engine if the aircraft altitude is below thirty thousand feet (30,000 ft).

The APU operating envelope extends up to forty-five thousand feet (45,000 ft) if the APU is started at a lower altitude. The APU will start at altitudes up to thirty-nine thousand feet (39,000 ft) and may start up to forty-three thousand feet (43,000 ft).

The APU is housed within a fireproof titanium container in the aft equipment bay. The air intake for the APU is on the top of the aircraft fuselage to the left of the dorsal fin forward of the vertical stabilizer. The APU exhaust is below the right engine pylon. The APU is mounted on two rails within the housing container and a hatch on the left side of the aircraft fuselage can be opened and the APU removed from the aircraft for maintenance by sliding the unit out horizontally on the mounting rails. However, if necessary, three removable panels on the APU housing container provide maintenance and servicing access with the unit in place.

The APU system is divided into the following subsystems:

- 2A-49-20: APU Mechanical Assembly
- 2A-49-30: APU Control and Operation

2A-49-20: APU Mechanical Assembly

1. **General:**

   The APU assembly comprises the following subsystems:

   - Powerplant
   - Electronic Control Unit (ECU)
   - Starter and Igniters
   - Fuel Control
   - Lubrication System
   - Fire Detection and Warning System
   - Alternating Current (AC) Generator
   - Bleed Air

2. **Description of Subsystems, Units and Components:**

A. **Powerplant System:**

(See Figure 1 through Figure 4.)

The APU is a single shaft, constant speed gas turbine engine that drives an accessory gearbox connected to a forty thousand volt / amperage (40k VA) generator and provides bleed air to the supply manifold of the pneumatic system. The APU mechanical assembly includes the following components:

(1) Air Intake:

An air inlet door mounted on the top left side of fuselage in front of the vertical stabilizer provides an intake to the APU turbine. The door is connected to a duct made of composite material that routes external air into the APU and surrounding enclosure. The duct is split downstream of the inlet door with one section of the duct providing flow into the APU inlet plenum, and the other section flow for the oil cooler and circulating air cooling for the APU exterior. The cooling air stream is routed to merge with the APU exhaust where it is vented overboard.

The inlet door is controlled by the APU Electronic Control Unit (ECU) and operated by an electrical actuator. A Rotary Variable Displacement Transducer (RVDT) attached to the door hinge point provides position feedback to the ECU. The ECU opens the inlet when the APU MASTER switch, located on the APU panel on the cockpit overhead, is selected ON. When the air inlet door has opened, a READY light illuminates on the APU panel, indicating that the APU is configured for starting. (APU inlet door position is shown graphically on the Doors synoptic 2/3 window and the APU/Bleed system 1/6 window - see Section 2B-07-00.) The inlet door is fully open when the APU is started on the ground, but if the aircraft is airborne, the amount of inlet opening is regulated by the ECU to match the air requirements for combustion and cooling. The inlet door maximum opening is forty-five percent (45%) up to an altitude of twenty-five thousand feet (25,000 ft). The maximum opening is one hundred percent (100%), if necessary, above that altitude. Additionally, if the APU is started above thirty-five thousand feet (35,000 ft), supplemental air from the pneumatic system supply manifold is introduced into the APU air intake duct through a Bleed Air Augmentation Valve (BAAV) to provide increased air flow for starting.

Two sensors are installed in the air inlet duct. A temperature sensor, called the T_2 sensor provides ambient air data to the ECU for fuel control metering. Temperature information from the sensor is also used by the ECU to determine if reverse air flow is entering the inlet duct from a malfunction in the bleed air Load Control Valve (LCV) or the BAAV. A separate pressure sensor, termed P_2 provides information to the ECU for fuel control management, air inlet door position commands, and Surge Control Valve (SCV) operation.

The inlet door remains open for a period when the APU is shut down in order to provide airflow for the APU cooldown cycle. The door is fully closed only after APU rpm degrades below forty percent (40%).

A Rotary Variable Displacement Transducer (RVDT) installed on the inlet door provides position feedback information to the ECU for control of door position.

(2) Compressor and Turbine:

The APU has a single stage compressor section coupled on a common shaft to a two-stage turbine. The APU is mounted horizontally so that air drawn into the inlet duct impinges directly onto the blades of the compressor section. The compressor increases the pressure of the ambient air and routes some of the air around the turbine stage for cooling and injects the rest into the annular-shaped combustor surrounding the two turbine stages. In the combustor the air is mixed with fuel sprayed through atomizers and the fuel / air mixture ignited by electrically powered igniters - the resulting pressure drives the turbine stages. The hot gases from the turbine section are mixed with cooling air flowing around the section and from the exhaust side of the oil cooler split intake duct. The resulting mixture is significantly cooler and acoustically quieter when exhausted overboard on the right rear of the fuselage below the engine pylon.

(3) Accessory Gearbox:

An accessory gearbox mounted at the compressor end of the APU is turned by the axial drive shaft. The gearbox converts the high rpm of the drive shaft to a lower rpm with higher torque suitable for powering the APU accessories. The gearbox drives the AC generator and APU oil pump and provides the mounting interface for the APU starter. A speed sensor, mated to the gear teeth on the compressor bearing, provides data to the ECU for on-speed control and overspeed protection during APU operation. The sensor uses a permanent magnet surrounded by dual coils to generate a voltage output to the ECU proportional to APU rpm.

(4) Surge Control Valve (SCV):

A surge control valve is installed on the APU to promote uninterrupted smooth air flow through the compressor and turbine stages. The ECU opens the surge control valve when the APU is started above sixteen thousand five hundred feet (16,500 ft). When the valve is open, some air is bled from the compressor section and ducted to discharge into the APU exhaust shroud through a separate port.

(5) Exhaust:

Spent exhaust gases from the APU turbine section are directed through a tailpipe exhaust assembly overboard, venting beneath the right engine nacelle. The tailpipe shroud has a larger diameter than the APU turbine exhaust exit opening. As exhaust gases pass through the shroud, ambient air in the APU compartment is drawn into the tailpipe assembly by the ejector pump action of the gas flow. Ambient air flow decreases the temperature of the APU exhaust and creates a lower pressure within the compartment, causing additional airflow that cools the APU components and accessories. Mixing ambient air with the exhaust also acts to reduce the noise level of the exhaust.

Two exhaust gas temperature (EGT) sensors are mounted to project into the stream of gases exiting the turbine section. The sensors sample the gases prior to mixing with cooling airflow to provide an accurate indication of APU combustion. Each of the sensors has two probes: one short and one long to furnish accurate data for the whole exhaust stream to the ECU. The ECU uses the temperature information to manage fuel flow to maintain the APU within operating limits. The EGT sensors provide continuous temperature sampling from four hundred degrees to thirteen hundred degrees Fahrenheit (400°F - 1,300°F / 204°C - 704°C) and can detect transient temperature rises up to nineteen hundred degrees Fahrenheit (1,900°F / 1038°C).

Because the APU exhaust is located beneath the right engine pylon, starting the APU on the ground is inhibited with the fan section cowling of the right engine open since the APU exhaust high temperature gases would seriously damage the cowling. An amber warning indicator, installed on the APU control panel on the cockpit overhead, illuminates whenever the cowling on the right engine is open for servicing or maintenance and indicates to the flight crew that the APU cannot be started until the engine cowling is closed. APU starting is prevented by using an input from the two fan cowl position sensing switches on the nacelle. Both switches must indicate that the cowl is open in order to prevent the START pushbutton electric signal from reaching the ECU. The start prevention circuit is routed through the combined Weight On Wheels (WOW) switch to ensure that the cowl position switch inputs are only used during APU starts on the ground. The APU start signal cannot be interrupted by the switches while in the air.

B. Electronic Control Unit (ECU):

The Electronic Control Unit (ECU) is a microprocessor with embedded software that provides independent control and operational monitoring of the APU through direct wire connections to the mechanical components of the APU and ARINC 429 bus connections to Modular Avionics Units (MAUs) #1 and #2 for aircraft sensor data monitoring ambient atmospheric conditions. The ECU is physically located in the Aft (baggage) compartment Electronic Equipment Rack (AEER).

The ECU is powered through the APU MASTER switch by the left essential DC bus through the APU CONT #1 circuit breaker or by the right battery bus through the APU CONT #2 circuit breaker (the ECU selects one of the two power sources if both are available). The ECU controls the APU start sequence including opening the air inlet door, providing voltage to the APU starter, initiating fuel flow to the combustion chamber when rpm is sufficient and powering the igniters. Once the APU has been started, the APU monitors performance and adjusts operating temperature and rpm by commands to the fuel control, controls and monitors the loading of the AC generator and provides bleed air to the pneumatic system, if selected, by varying the position of the Load Control Valve (LCV). The ECU also records the cumulative operating time of the APU whenever rpm reaches the normal range though an hourmeter function. The electronically stored record of APU operation is used to schedule periodic maintenance and inspection of the APU.

The ECU provides operational protection for the APU by shutting down the unit if operating parameters are exceeded or if a fire is detected within the APU housing. The APU ECU uses two sets of operating limits: one for ground operation, termed the non-essential mode and another for inflight operation called the essential mode. Shutdown parameters for both modes are detailed in Section 2A-49-30: APU Control and Operation.

C. Starter and Igniters:

(See Figure 2 and Figure 3.)

(1) APU Starter:

The APU starter is electrically driven by the power source selected by the ECU. The starter is physically mounted on the accessory gearbox and spins up the APU through the gear interface. As the APU drive shaft rotates, the blades in compressor section draw in ambient air through the open air inlet and furnish pressurized air flow to the combustion chamber. Fuel and ignition are provided to the combustion chamber and the APU accelerates through the forces generated in the turbine section. The starter is disengaged when the APU reaches forty-six percent (46%) rpm if the aircraft is on the ground or sixty percent (60%) if the aircraft is airborne.

(2) Igniters:

Two igniters in the combustion chamber supply an intermittent, high voltage spark to ignite fuel during the start sequence. Operation of the igniters is fully automatic and controlled by the ECU. During ground starting, ignition is terminated at fifty percent (50%) rpm. During an airstart, ignition is terminated at ninety-eight percent (98%) rpm. The ignition unit will also automatically energize through the auto-relight function of the ECU if the APU flames out during operation.

D. Fuel Control System:

Fuel is supplied to the APU from the left wing tank using the left main fuel pump (the right main tank and pump may be used if the crossflow valve is opened). Pressurized fuel is routed through the APU fuel shutoff valve on the left wing rear beam structure that is controlled by the APU MASTER switch and the ECU. A fuel line transits aft from the shutoff valve to supply the APU fuel control.

The fuel control is a closed-loop system that receives control inputs from the ECU. The unit combines a fuel pump, filter, pressure regulator and metering valve into a single line replaceable unit. The ECU calculates the appropriate output from the metering valve using data inputs for atmospheric conditions from the MAUs, and APU mounted speed and temperature sensors. The correct amount of fuel is delivered to the combustion section, where it is atomized and mixed with compressor section air for combustion

The ECU also provides protective shutdowns of the APU by interrupting fuel flow at the fuel control unit.

NOTE:

Pressure from a fuel tank boost pump is required to start the APU.

E. Lubrication System:

(See Figure 2 and Figure 3.)

The APU lubrication system uses a lube (oil) pump to circulate pressurized oil to cool and lubricate the gearbox, bearings and shafts in the powerplant. Oil is contained in an integral 5.25 quart oil reservoir with an oil heating element, an oil level sensor and a temperature probe. External air drawn through the oil cooler section of the APU air inlet ducts cools the oil as it passes through a oil cooler heat exchanger.

The thermostat controlled oil heater in the reservoir warms the oil to a level that ensures high altitude starting. The oil heater, which functions independently, is powered by the right main AC bus. An internal thermostat actuates the heater when the APU oil temperature is at or below seventy degrees Fahrenheit (70°F / 21°C) and shuts off the heater when the temperature reaches one hundred ten degrees Fahrenheit (110°F / 43°C). If the oil temperature exceeds three hundred degrees Fahrenheit (300°F / 149° C) for ten (10) seconds, the APU shuts down if the aircraft is on the ground. This automatic shutdown for high oil temperature is inhibited while the aircraft is in flight.

Checking the oil level and / or oil servicing can be accomplished by two different methods. It can be done manually by removing the gravity fill cap on the oil tank and visually inspecting the oil level. Oil can be added directly into the tank if servicing is required. The APU oil level is also electronically displayed on the oil replenisher, located on the left side of the tail compartment, adjacent to the tail compartment door. An oil level reading is also indicated on the Ground Service synoptic page 2/3 window. Automatic servicing is accomplished using the oil replenisher. The oil replenisher is powered by the Ground Service bus. For more information about oil servicing and oil replenisher operation, see Section 09-02-30: APU Oil Servicing.

F. Fire Detection and Warning System:

(See Figure 1.)

Fire detection and warning for the APU is provided by an assembly consisting of a hermetically sealed stainless steel loop filled with helium and a stabilizing chemical. Embedded within the loop is a pressure sensor element. When heat is applied to the detector loop, the pressure of the helium within rises triggering the sensor element. The sensor communicates the existence of fire in the APU compartment to MAUs #1, #2 and #3. The MAUs signal the Monitor and Warning System (MWS) that in turn generates Crew Advisory System (CAS) messages for display in the cockpit. Hard wire connections from the detector switches initiate illumination of the FIRE legend on the APU control panel on the cockpit overhead and the red master warning light on the cockpit glareshield. If the aircraft is on the ground, the warning horn in the nose wheel well will also

sound.

The ECU automatically initiates an immediate protective shutdown if a fire exists, bypassing the normal APU cool down period. (Automatic APU shutdown is inhibited during FIRE TEST checks.)

For a complete description of the APU fire detection and protection features, see Section 2A-26-20: Engine and Auxiliary Power Unit (APU) Fire and Overheat Detection and Warning System and Section 2A-26-30: Engine and APU Fire Extinguishers.

G. Alternating Current (AC) Generator:

(See Figure 1 and Figure 4.)

A generator mounted on the APU gearbox provides a source of Alternating Current (AC) power for use on the ground or in flight if an engine-driven generator is not available. The APU generator produces three phase four hundred Hertz one hundred fifteen / two hundred volt power (3ϕ 400Hz 115/120v) and can deliver up to forty thousand volt/amperes (40kVA). The producing capacity of the generator is identical to those mounted on the aircraft engines - the only difference is that the APU generator does not have an Integrated Drive transmission since the APU operates at a constant speed (rpm). The generator can provide a full 40kVA output up to the limit of the APU operating envelope of forty-five thousand feet (45,000 ft).

When the APU has reached an operating rpm of ninety-nine percent (99%) for at least two seconds, the APU is capable of driving the generator. The APU generator has a Generator Control Unit (GCU) that monitors the voltage output and phase sequencing of the generator. If the output of the generator is within acceptable parameters, and the APU is at operating rpm, the ECU determines that the APU generator is ready to assume aircraft electrical loads. The APU generator can be selected on or off using a switchbutton labelled APU GEN on the ELECTRICAL POWER CONTROL panel on the cockpit overhead. The amber ON legend within the switchbutton will illuminate when the APU generator is in use. The APU generator GCU will drop the generator off line if the quality of power produced by the generator falls outside of normal parameters. For a description of the APU generator and the AC power system, see Section 2A-24-20: AC Electrical Power System.

H. APU Air:

The APU air system provides pressurized air for engine starting and operating the air conditioning packs on the ground. An interface between the engine bleed valves, APU load control valve and with the radio altimeter signal used by the ice detector circuits enables the APU to continue to supply the air conditioning packs up to an altitude of fifteen hundred feet (1,500 ft), allowing the aircraft engines to supply all available thrust for increased takeoff performance. APU air may, under certain circumstances, also be used to provide additional pressurized air to aid in starting an engine in flight. APU air is available immediately after the APU has reached an operating speed of ninety-nine percent (99%) rpm for at least two seconds. If the APU was started under cold conditions, APU air loading will be delayed for sixty (60) seconds, unless the bleed air is being used in attempting to start a main engine in flight. See Figure 5.

The ECU operates the APU load control valve to provide bleed air to the manifold supply duct when the pushbutton switch labelled APU on the BLEED AIR control panel on the cockpit overhead is selected to ON. When the load control valve is open, the blue ON legend within the switch will illuminate. The ECU adjusts fuel flow at the fuel control to maintain the APU rpm at one hundred percent (100%) when providing bleed air loads. APU air is drawn off of the compressor section of the powerplant and ducted through a check valve that prevents engine bleed air pressure from disrupting airflow within the APU. Additional information regarding APU air is contained in Section 2A-36-20: Pneumatic System Control, Distribution and Indication.

3. **Controls and Indications:**

   See Section 2A-49-30 for APU system controls and indications.

4. **Limitations:**

   See Section 2A-49-30 for APU system limitations.

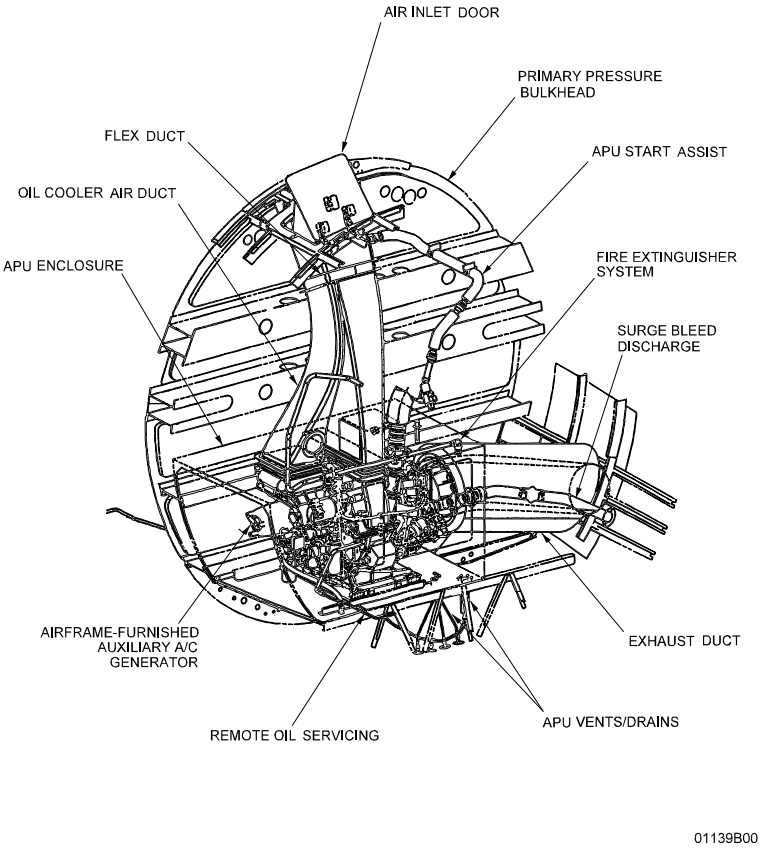

APU Compartment General Arrangement
Figure 1

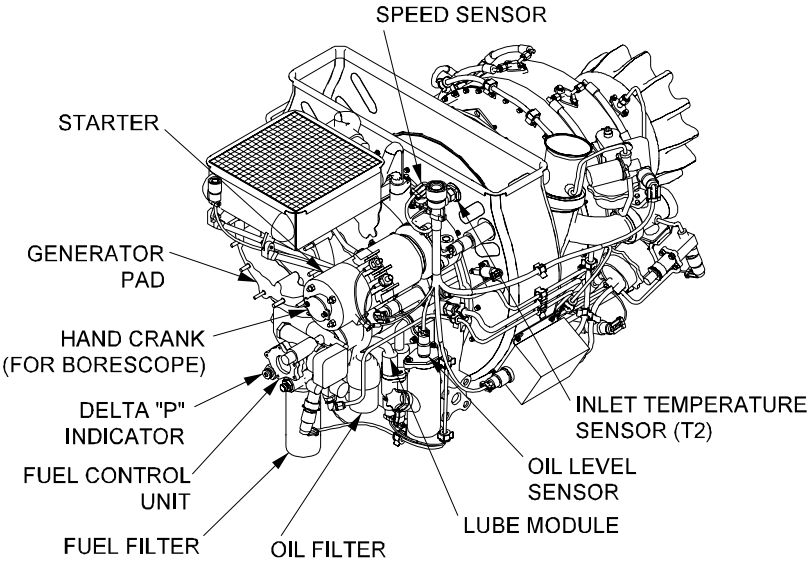

35076F00

APU Components (Front View)
Figure 2

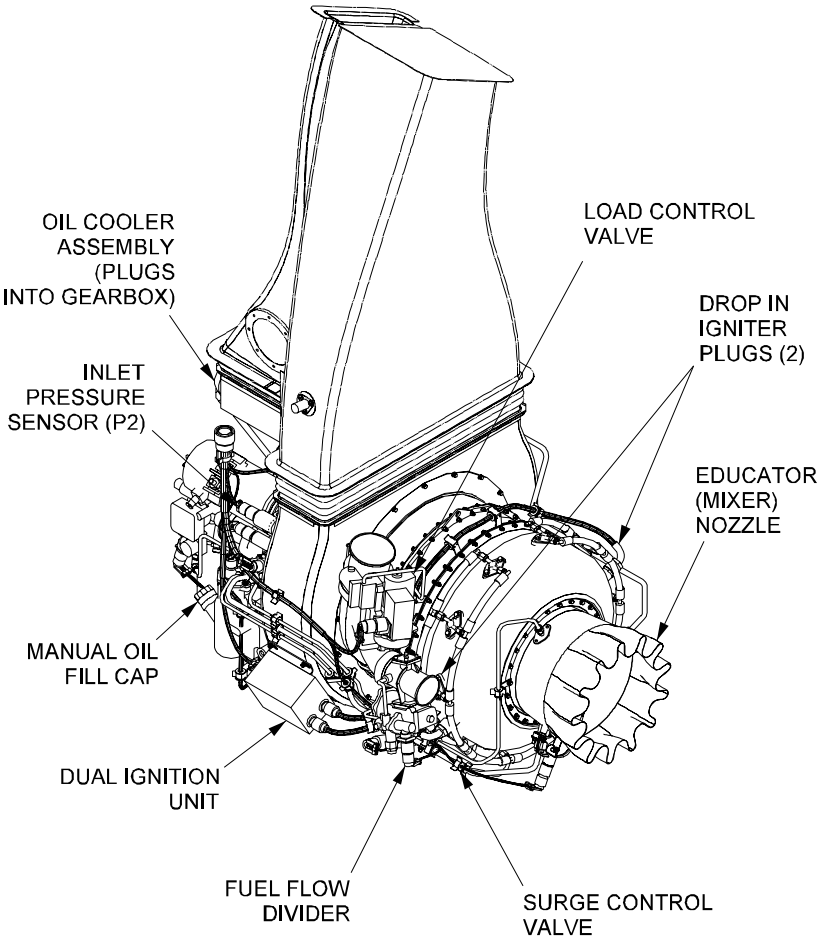

APU Components (Aft View)
Figure 3

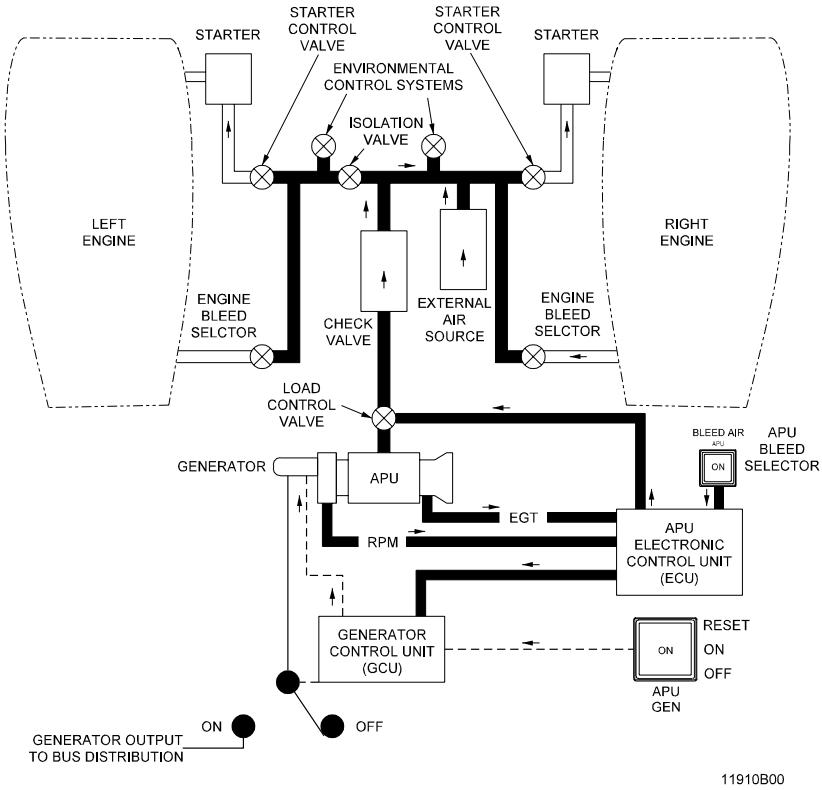

APU System Simplified Block Diagram
Figure 4

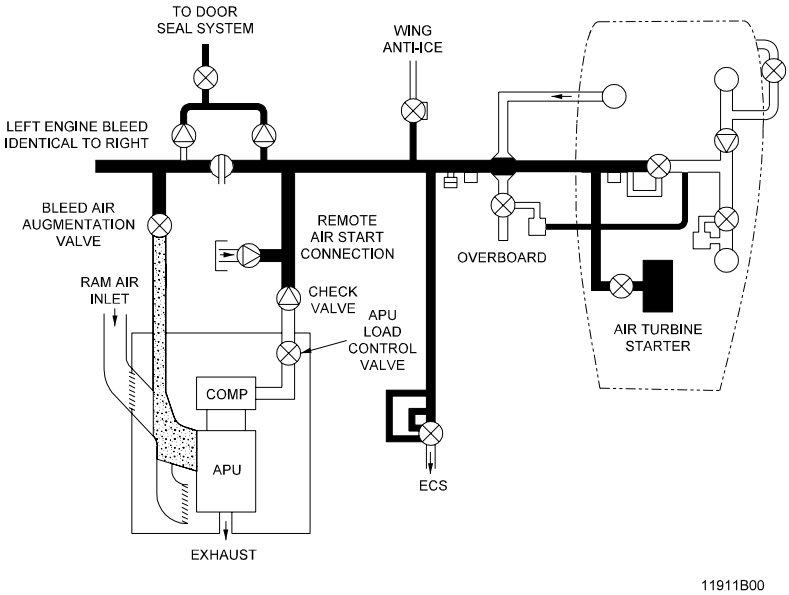

APU Air System Simplified Block Diagram
Figure 5

2A-49-30: APU Control and Operation

1. **General Description:**

   The flight crew has pushbutton switches to initiate and terminate operation of the APU on the APU CONTROL panel on the cockpit overhead. Digital readouts of APU temperature and rpm are provided above the pushbuttons. A separate pushbutton switch on the BLEED AIR Control Panel on the cockpit overhead is used to select the APU as a source of bleed air for the pneumatic system. The APU CONTROL panel includes an APU fire warning light and a fire extinguisher switch that can be used to inject the contents of the left fire extinguisher bottle into the APU container.

   After the APU has been started, operation of the APU is controlled by the

Electronic Control Unit (ECU). The ECU functions autonomously to maintain APU temperature and rpm within limits during all load conditions. The ECU also controls the operation of the air inlet, the Bleed Air Augmentation Valve (BAAV) and maintains oversight of the power quality of the AC generator by monitoring the Generator Control Unit (GCU). The ECU provides protective shutdowns of the APU if operational parameters are exceeded to prevent damage to the unit. Malfunctions are reported by the ECU to Modular Avionics Units (MAUs) #1 and #2 for communication to the Monitor and Warning System (MWS) for the generation of Crew Alerting System (CAS) messages and for storage in the Central Maintenance Computer (CMC) for post-flight analysis and troubleshooting.

APU Control and Operation employs the following components:

- Electronic Control Unit (ECU)
- APU Control Panel
- APU / Bleed system 1/6 window display

(See Figure 7.)

2. Description of Subsystems, Units and Components:

(See Figure 6.)

A. Electronic Control Unit (ECU):

(1) General Description:

The ECU is installed in the Baggage compartment Electronic Equipment Rack (BEER). The ECU is powered from either the right essential DC bus or the left battery bus, depending upon availability. If both are available the ECU is powered by the bus with the highest voltage reading. The dual power sources allow for starting the APU with only battery power and provide redundancy in the event of an electrical malfunction when APU operation might be advantageous.

The ECU is initially powered from one of the sources when the APU MASTER switch is selected ON and remains powered until five minutes after APU RPM drops below 5% during shutdown providing temperature and rpm data to the digital displays and APU / Bleed system window display through ARINC 429 bus connections to the MAUs.

The ECU control authority for the APU has two operating regimes: non-essential and essential. The non-essential regime is for normal ground operations when the APU is suppling electrical and/or pneumatic bleed air to aircraft systems. While operating in this regime the ECU will provide a full range of protective shutdowns to prevent damage to the APU. The protective logic is based on the assumption that for ground operations other sources can be used to supplant the APU to meet aircraft requirements, such as an external AC electrical supply or a pneumatic air cart.

The essential control mode is confined to APU operation while the aircraft is airborne. The essential regime is initiated by the aircraft combined Weight On Wheels (WOW) switch transitioning to the in the air state. In the essential control mode the ECU blocks some of the protective shutdowns of the APU since the control logic assumes that starting the APU while airborne would only be necessary during

a malfunction or failure. Abnormal circumstances might require that the APU electrical power or bleed air be essential to recovering from the condition, therefore the safe condition of the aircraft takes precedent over any possible damage to the APU.

NOTE:

The essential control regime is operative during the use of APU air for the air conditioning packs when executing an enhanced performance takeoff - the regime does not depend upon inputs from the radio altimeter, only the combined WOW switch.

The following table illustrates the control regime matrix:

Protective Shutdown	Non-Essential Mode (Ground)	Essential Mode (Flight)	Description
Exhaust Gas Temperature (EGT) Overheat	YES	NO	EGT above 732°C
Oil Temperature Hot	YES	NO	Oil temp above 148.9°C for 10 seconds with APU rpm >95% or during cooldown <70%
Low Oil Pressure	YES	NO	Oil press <30 psi with APU rpm >95% -shutdown in 15 seconds
Low Oil Pressure Switch Failure	YES	NO	ECU detects pressure switch failure
Loss of both EGT sensors	YES	NO	If Thermocouples fail, APU defaults to 260°C to maintain operation
No Lightoff	YES	YES	APU rpm increases above 10% with no EGT increase
Starter Failure	YES	YES	Start contactor energized with no increase in APU rpm
Slow Start	YES	YES	APU rpm does not accelerate on schedule
No Start Acceleration	YES	YES	Starter energized with no rpm increase
Fire	YES	YES	Fire Detector senses fire in APU
ECU Failure	YES	YES	ECU internal failure
Overspeed	YES	YES	Over 106% rpm
Loss of speed sensors	YES	YES	ECU unable to determine rpm
Loss of Overspeed Protection	YES	NO	ECU overspeed circuit fails
Reverse Air Flow	YES	NO	APU air inlet temp over 176°C for 5 seconds with BAAV closed

Protective Shutdown	Non-Essential Mode (Ground)	Essential Mode (Flight)	Description
Underspeed	YES	NO	Low rpm during any phase of operation
Loss of DC Power	YES	YES	DC power absent for 50 milliseconds or more
Right Engine Cowl Open	YES	NO	If airborne, assumes faulty indication
Air Inlet Door Failed Closed	YES	YES	Door not open in 30 seconds or with rpm>95% or door closes to only 5% open during cooldown (rpm <70%) - APU shuts down in 2 seconds

When the ECU initiates a protective shutdown of the APU during either the non-essential or essential operating regime, the normal APU cooldown period is bypassed in order to immediately eliminate the malfunction.

NOTE:

The ECU exchanges data with the MAUs over the ARINC 429 data bus system. If the data bus does not function properly, the APU can still be started and electrically loaded, however without ambient atmospheric data from the MAUs, the APU cannot provide a pneumatic bleed air. Loss of data bus communication would also prevent the MWS from generating CAS messages regarding the performance of the APU.

(2) Non-Essential (Ground) Mode APU Operation:

(a) Ground APU start using only aircraft battery power:

Prior to starting the APU, the flight crew ascertains that the aircraft battery is fully charged, that the APU fire detector is operational and that the left fire extinguisher bottle is full. These checks are accomplished by turning on the main batteries and ensuring a minimum of twenty-two (22) volts, depressing the APU TEST pushbutton on the FIRE TEST panel on the cockpit overhead and observing the correct indications and selecting the display systems on with the CAS window active to ensure that the following messages are not displayed:

- APU Fire Detector Fail
- L Fire Bottle Discharge

The CAS message display should not contain any other messages indicating an APU malfunction. The display system should be turned off after checking for CAS messages to preserve battery power.

The amber right engine cowl warning light must not be illuminated when attempting to start the APU - an electrical interlock will prevent the APU from starting if the right engine cowling is open.

The left main fuel boost pump is normally used to provide fuel for APU starting. The pump is turned on by depressing the pushbutton labelled L MAIN on the FUEL SYSTEM panel and observing that the OFF legend within the pushbutton is not illuminated. If necessary the right main boost pump can provide fuel pressure if the crossflow valve is opened - both the left and right main boost pumps are powered and controlled by the essential DC bus that is supported by the batteries.

The APU start proceeds in the following order:

- The APU MASTER switch is depressed to ON and the blue ON legend within the switch illuminates
- The APU ECU performs a prestart Built-In Test (BIT), opens the air inlet door and opens the fuel shutoff valve at the left tank rear wing spar
- Within ten to sixteen (10 -16) seconds when the BIT test is complete and the air inlet door and fuel shutoff valve configurations are correct, the ECU illuminates the READY light below START switch

NOTE:

If the Outside Air Temperature (OAT) is twenty degrees Fahrenheit (20°F / -6.6°C) or below, the APU will start, but requires a longer interval to reach normal speed. The APU oil heater is not operative without Alternating Current (AC) power. If the ECU senses oil temperature below -23.3°C (-10°F), the starter motor may remain engaged for up to 50 seconds.

- When the READY light is illuminated, depressing the START pushbutton closes the APU Start Contactor connecting the APU starter on the accessory gear box to the battery tie bus, initiating rotation of the APU. The blue ON legend within the START switch will illuminate as long as the starter is engaged.
- At five percent (5%) rpm the fuel control shutoff valve opens and the igniters are energized
- At twelve percent (12%) rpm the READY light extinguishes (if previously on)
- At twenty-five percent (25%) rpm the fuel divider opens porting additional fuel to the fuel atomizers in the combustion chamber
- At forty-six percent (46%) rpm the ECU disengages the starter since the APU has sufficient rpm to accelerate using turbine stage energy, and the blue

ON legend within the START switch extinguishes

- At fifty percent (50%) the ignitors are de-energized and combustion is self-sustaining
- At ninety-five percent (95%) the hourmeter starts recording cumulative operating time of the APU
- After reaching at least ninety-nine percent (99%) for two (2) seconds the APU can support operation of the generator and after sixty (60) seconds bleed air is available
- Stabilized on speed rpm of one hundred percent (100%) equals 45,586 rpm

(b) Normal ground operation:

After the APU rpm has stabilized, the APU generator may be selected on by depressing the APU GEN switch on the ELECTRICAL POWER CONTROL panel on the cockpit overhead. The amber ON legend within the switch will illuminate when the generator is providing power to aircraft systems. The APU Load Control Valve (LCV) may be opened by depressing the APU switch on the BLEED AIR Control Panel on the cockpit overhead. The blue ON legend within the switch will illuminate when the LCV is open. Selecting the LCV open with the engine bleed switches off will automatically open the isolation valve. The APU will provide a bleed air source for air conditioning if the L PACK and/or R PACK switches are selected ON. A slight rise in APU EGT will be seen when the APU generator is selected on and/or the air conditioning packs are selected on since the ECU will increase fuel flow through the fuel control to accommodate the increased demands on the APU. If the normal operating temperature limit of seven hundred thirty-two degrees centigrade (732°C / 1350°F) is reached the ECU will begin closing the LCV to reduce demand on the APU in order to remain within the temperature limit.

(3) Essential (Air) Mode APU Operation:

(a) Inflight APU start using normal aircraft electrical power:

The inflight start sequence of the APU is the same as that of the non-essential (ground) mode sequence with some modifications. The start may be monitored by selecting the APU / Bleed system display 1/6 window; the APU oil heater is operational with Alternating Current (AC) power and maintains oil tank temperature between seventy plus or minus ten and one hundred ten plus or minus ten degrees Fahrenheit (70°F±10 / 21°C±6 - 110°F±10 / 43°C±6) whether the APU is operating or not; and the ECU opens the Bleed Air Augmentation Valve (BAAV) for fifteen (15) seconds prior to APU start to warm the unit if the aircraft is above thirty-five thousand feet (35,000 ft).

The APU start proceeds in the following order:

- The APU MASTER switch is depressed to ON and the

blue ON legend within the switch illuminates

- The APU ECU performs a prestart Built-In Test (BIT), determines APU oil temperature, opens the air inlet door and opens the fuel shutoff valve at the left tank rear wing spar
- Within ten to sixteen (10 -16) seconds when the BIT test is complete and the air inlet door and fuel shutoff valve configurations are correct, the ECU illuminates the READY light below START switch
- When the READY light is illuminated, depressing the START pushbutton closes the APU Start Contactor connecting the APU starter on the accessory gear box to the battery tie bus, initiating rotation of the APU. The blue ON legend within the START switch will illuminate as long as the starter is engaged.
- At five percent (5%) rpm the fuel control shutoff valve opens and the igniters are energized
- At twelve percent (12%) rpm the READY light extinguishes (if previously on)
- At twenty-five percent (25%) rpm the fuel divider opens porting additional fuel to the fuel atomizers in the combustion chamber
- At sixty percent (60%) rpm the ECU disengages the starter since the APU has sufficient rpm to accelerate using turbine stage energy, and the blue ON legend within the START switch extinguishes
- At ninety-five percent (95%) the hourmeter starts recording cumulative operating time of the APU
- At ninety-eight percent (98%) the ignitors are de-energized
- After reaching ninety-nine percent (99%) for two (2) seconds the APU will support the generator or provide bleed air to assist engine starting if the aircraft is below thirty thousand feet (30,000 ft)
- Stabilized on speed rpm of one hundred percent (100%) equals 45,586 rpm

(4) Commanded (Normal) Shutdown:

The APU is shut down by selecting the APU STOP switch to OFF, triggering the following sequence of events:

- A cool down period is initiated prior to stopping the APU to prevent component damage from sudden temperature change. If the APU was supporting generator output and/or furnishing bleed air at the time of shutdown, the loads are shed within two (2) seconds after depressing the STOP switch. If the aircraft is on the ground or in flight below twenty thousand feet (20,000 ft), the ECU decreases APU rpm at a rate of one half degree (½°) per second for sixty (60) seconds from one hundred percent (100%) down to seventy percent

(70%), and then shuts down the APU. If the aircraft is in flight above twenty thousand feet (20,000 ft), the ECU maintains one hundred percent (100%) rpm for sixty (60) seconds, and then shuts down the APU.

NOTE:

If the APU MASTER switch is selected off, the APU fuel shutoff valve closes and the APU immediately shuts down regardless of the cooldown cycle - shutting down the APU in this manner is strongly discouraged since damage to internal components is likely.

- When the APU speed decreases below sixty-three percent (63%), the ECU closes the air inlet door to only ten percent (10%) open. When the door opening decreases, the ECU samples APU rpm until the speed drops below forty percent (40%) and closes the door.
- The ECU then initiates a five (5) minute monitor period, continuing to supply power for EGT and rpm indications to ensure a complete shutdown. The ECU prompts an blue advisory CAS “APU Master On” message until the APU MASTER switch is selected off. If the APU MASTER switch is selected off before the five (5) minute period expires, the message is not displayed.
- Upon completion of the monitoring period, the ECU performs a shutdown by testing the overspeed protection circuitry within the ECU. At this point, the only remaining electrical load is the ARINC 429 Data Bus. Any faults detected during shutdown testing are sent to the Monitor and Warning System for CAS message display and/or the Central Maintenance Computer (CMC).
- At the completion of the shutdown process electrical power is removed from the APU

NOTE:

If the APU START switch is depressed during the cool down period, the APU will accelerate back to normal rpm

NOTE:

The starter is capable of an immediate restart during spool down if the APU is at or below seven percent (7%) rpm.

Additional procedures for starting and operating the APU in various scenarios are detailed in Section 03-02-10 through 03-02-40: APU Ground Operation, in the appropriate sections of Chapter 05: Expanded Abnormal / Emergency Procedures and in the Quick Reference Handbook (QRH).

B. APU Control Panel:

(See Figure 8 through Figure 10.)

The APU control panel is located on the cockpit overhead and contains the pushbutton switches and digital indicators necessary for APU operation. Installed on the panel are:

- A digital EGT indicator calibrated in degrees centigrade (C°) with white numerals
- A digital RPM indicator with white numerals
- A MASTER switch with a blue ON internal legend that illuminates when in use
- A START switch with a blue ON internal legend that illuminates when in use
- A STOP switch with a blue ON internal legend that illuminates when in use
- A READY light with a blue internal legend that illuminates when the APU is ready to start
- A FIRE EXT switch
- A red FIRE annunciator light that illuminates when a fire is detected within the APU enclosure
- An amber warning indicator that illuminates if the right engine cowling is open

The ELECTRICAL POWER CONTROL panel on the cockpit overhead contains the APU GEN pushbutton switch that connects the APU generator to the aircraft AC buses. The amber ON legend within the switch will illuminate when the APU generator is in service.

The BLEED AIR Control Panel on the cockpit overhead contains the bleed air pushbutton switch labelled APU that controls the APU LCV. When the APU is supplying bleed air to the supply manifold, the blue ON legend within the switch will illuminate. If the engine bleed air switches are selected off, opening the LCV with the switch will also open the supply manifold isolation valve.

C. APU / Bleed System 1/6 Window Display:

The APU / Bleed system 1/6 window display contains a graphic presentation of APU operating temperature and rpm in the format of simulated analog gages, a depiction of the air inlet door and digital readouts of bleed air manifold pressure.

The top left gage figure is a readout of APU EGT. The display includes a pointer that rotates clockwise within a circular band and a digital readout of temperature with a resolution of one degree centigrade (1°C). The pointer and the digital readout are displayed in white if the APU EGT is within normal parameters. If EGT exceeds temperature limits and the pointer reaches the red portion of the circular band, both the pointer and the digital readout will turn red.

To the right of the EGT gage is a RPM gage shown in the same format. If the rpm limit is exceeded and the pointer reaches the red band of the gage, both the pointer and digital readout of rpm are shown in red.

Below the analog gage displays is a depiction of the aircraft fuselage

shown from the rear. The APU air inlet door is indicated on the top left of the fuselage when the door is open - if the APU is not operating, the door is not shown.

To the left and right of the fuselage depiction are digital readouts of pressure within the respective sides of the bleed air supply manifold. The readouts have a range from zero to two hundred fifty-six (0 -256) with a resolution one (1) psi.

For a complete description of the APU / Bleed system page display, see Section 2B-07-00.

3. Controls and Indications:

A. Circuit Breakers (CBs):

The following CBs protect the APU system:

Circuit Breaker Name:	CB Panel:	Location:	Power Source:
APU PWR #1	LEER	C-14	L BATT Bus
APU CONT #1	LEER	C-13	L ESS DC Bus
APU PWR #2	REER	C-10	R ESS DC Bus
APU CONT #2	REER	C-11	R BATT Bus
APU DOOR	LEER	C-12	L ESS DC Bus
APU OIL HEATER	REER	C-12	R MAIN AC Bus

B. Crew Alerting System (CAS) Messages:

The following CAS messages are associated with the APU system:

Area Monitored:	CAS Message:	Message Color:
APU Fire Detector	APU Fire	Red
APU Air Inlet Door position incorrect	APU Door	Amber
ECU detects a fault that would shut down the APU if in non-essential mode	APU Essential	Amber
ECU	APU Exceedance	Amber
ECU detects uncommanded shutdown	APU Fail	Amber
APU Fire Detector	APU Fire Detector Fail	Amber
APU GCU	APU Generator Overload	Amber
ECU	APU Oil Pressure Low	Amber
APU GCU	APU Power Fail	Amber
APU GCU	APU Power Fault	Amber

Area Monitored:	CAS Message:	Message Color:
ECU	APU Shutoff Valve Fail	Amber
APU starter remains engaged above 60% rpm	APU Starter Engage	Amber
APU Door failed closed	APU Door	Blue
APU GCU	APU GCU Fail	Blue
APU GCU	APU Generator Fail	Blue
APU GCU	APU Generator Maint Reqd	Blue
ECU	APU Maintenance Required	Blue
APU Master switch remains on five (5) minutes after shutdown	APU Master On	Blue
ECU detects fault that prevents starting	APU Unavailable	Blue
Inflight Engine start requires APU air	Assisted Airstart	Blue
Engine bleeds not selected ON for enhanced performance takeoff	Bleed Configuration	Blue

C. Other Indications:

(See Figure 6 through Figure 10.)

4. Limitations:

A. APU Indications:

(1) APU EXHAUST GAS TEMPERATURE (EGT):

No limitations markings.

(2) APU RPM:

- 106% and above: Red Digits
- 104% to 105%: Amber Digits
- 0 to 103%: White Digits

B. APU Operation:

(1) General:

The APU can be operated on the ground, during takeoff, in flight and during landing. In flight, it is an optional source of electrical power via the APU GEN instead of one or both engine-driven generators. The APU can be used to supply pressurization airflow in conjunction with engine bleeds OFF takeoffs up to fifteen hundred (1,500) feet AGL. The APU may be used for starter-assisted main engine starts below 30,000 ft if required.

(2) Maximum Permissible EGT:

- Start: 1050°C

- Running: 732°C

(3) Maximum Rotor Speed:

All conditions: 106%.

(4) APU Starting Limits:

Continuous operation of the APU starter, when powered by airplane batteries is limited to a maximum of three (3) consecutive start attempts. A one (1) hour cool down period must be observed before the next full starter cycle is commenced.

APU start attempts when powered by an external DC cart are limited to a maximum of three (3) attempts. A fifteen (15) minute cool down is required between start attempts to protect airplane wiring. A one (1) hour cool down period must be observed before the next full starter cycle is commenced.

CAUTION

ALLOW FIFTEEN (15) MINUTES BEFORE ATTEMPTING ANOTHER APU START USING EXTERNAL DC POWER. THIS ALLOWS THE ELECTRICAL FEEDER CABLE FROM THE EXTERNAL POWER RECEPTACLE TO THE APU STARTER TO COOL.

NOTE:

Successful consecutive starts are limited to 6 at 10 minute intervals per start.

C. APU Generator Electrical Load:

The APU generator can deliver 100% (40 kva) electrical power on the ground or in flight from sea level to 45,000 ft.

D. APU Airstart Envelope:

For APU start limitations, see Figure 11: APU Start and Operating Envelope. The APU will start at or below 39,000 ft. APU starts are possible from 39,000 ft. to 43,000 ft. If starting the APU in conjunction with a dual generator failure, initiate start attempt at or below 39,000 ft.

E. Other Limitations:

There is no provision to manually open the inlet door if the door actuator fails or if electrical power is not available. If the inlet door is in transit and electrical power is lost, the inlet door will no longer move.

5. OPERATIONAL NOTE:

If the airplane is to be secured and stored in a “flight ready” condition, it is generally recommended that at intervals of every three (3) to seven (7) days the APU be operated (at no load) for a minimum of five (5) minutes in order to preclude the possibility of APU engine compressor shroud corrosion. This practice is strongly recommended at intervals of three (3) days when the airplane is located in climates with consistently high levels of humidity and salinity, such as coastal areas.

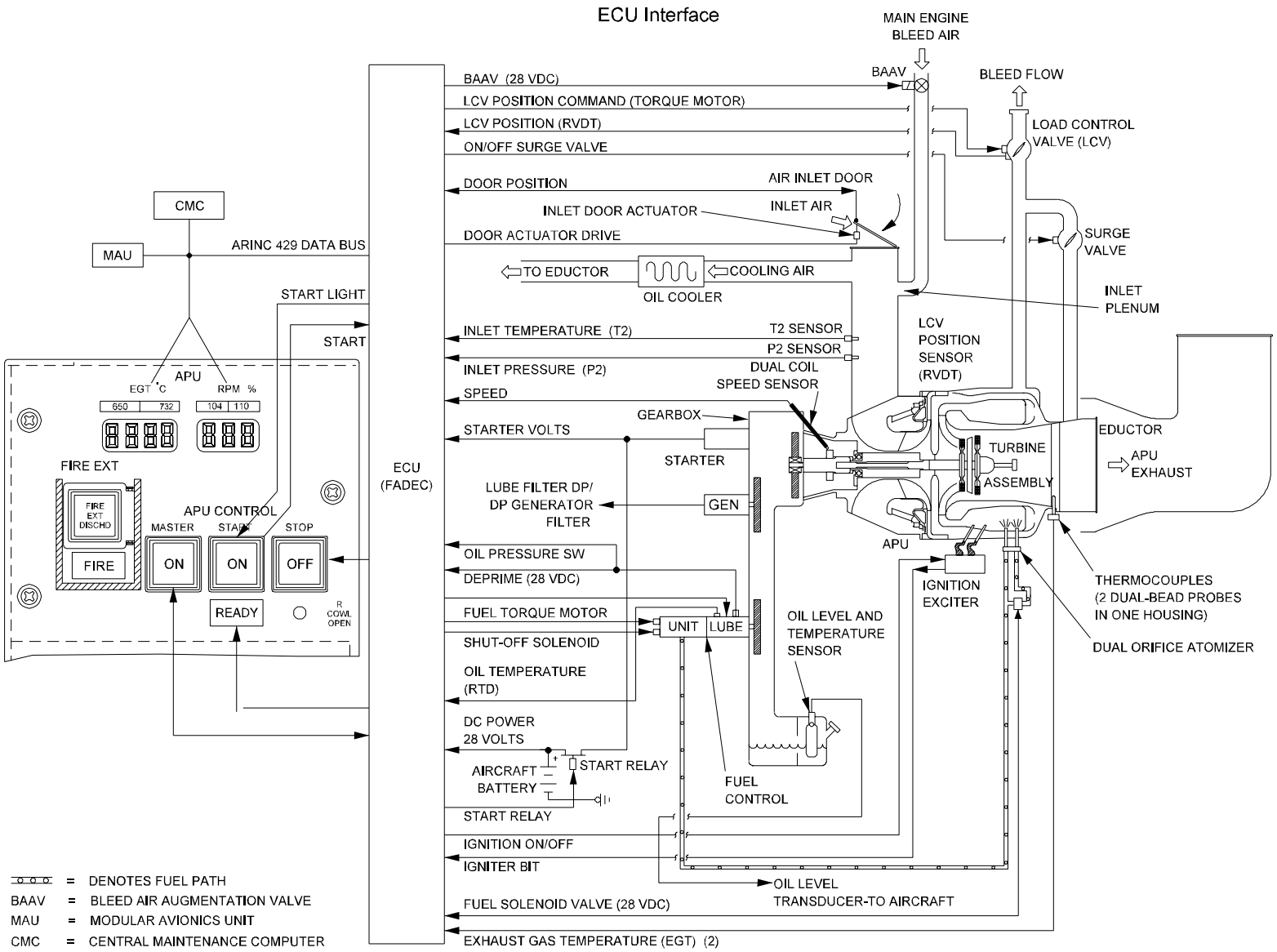

35078F00

APU Electronic Control Unit (ECU) Block Diagram
Figure 6

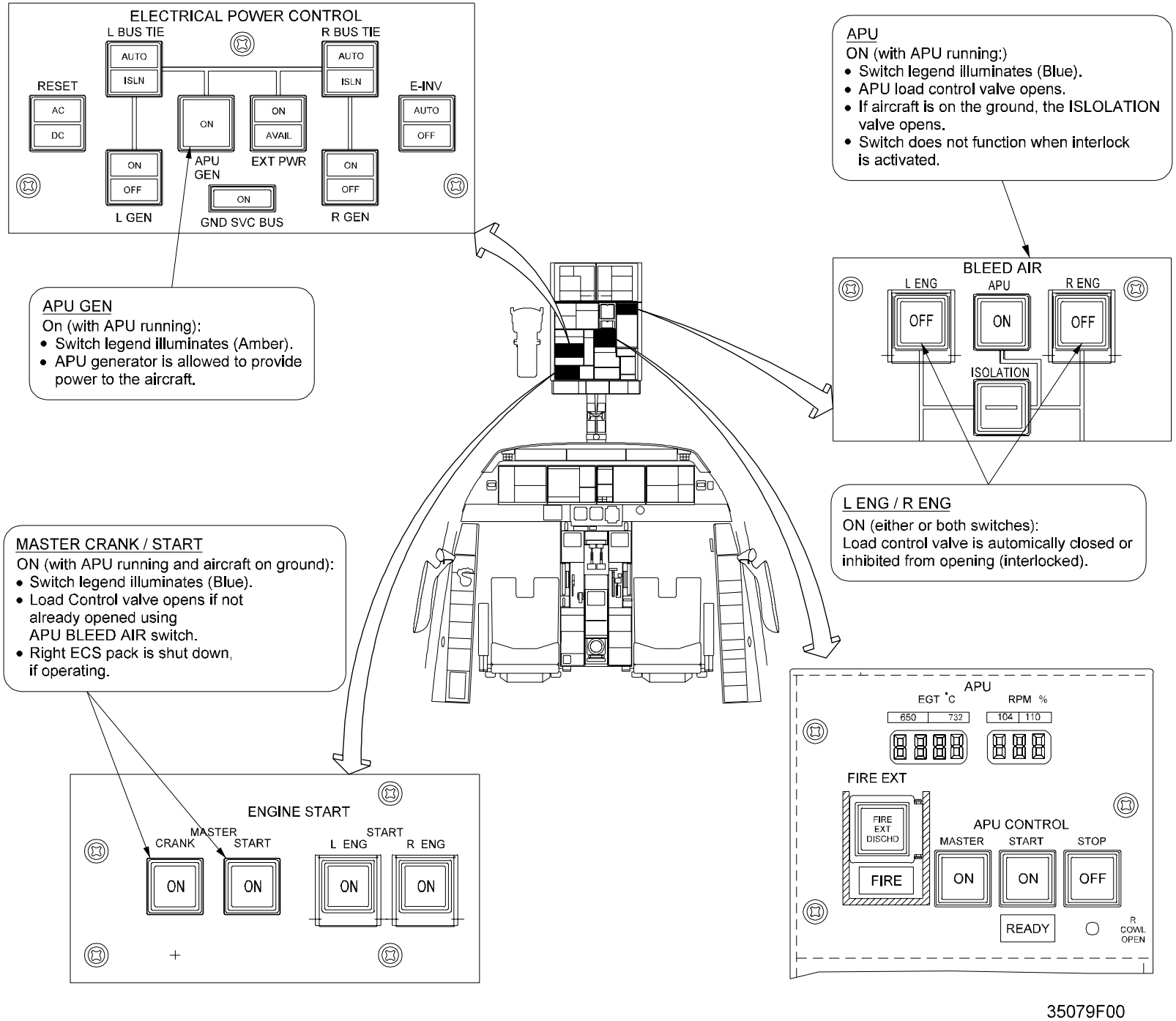

35079F00

APU Controls and Indications Component Locations
Figure 7

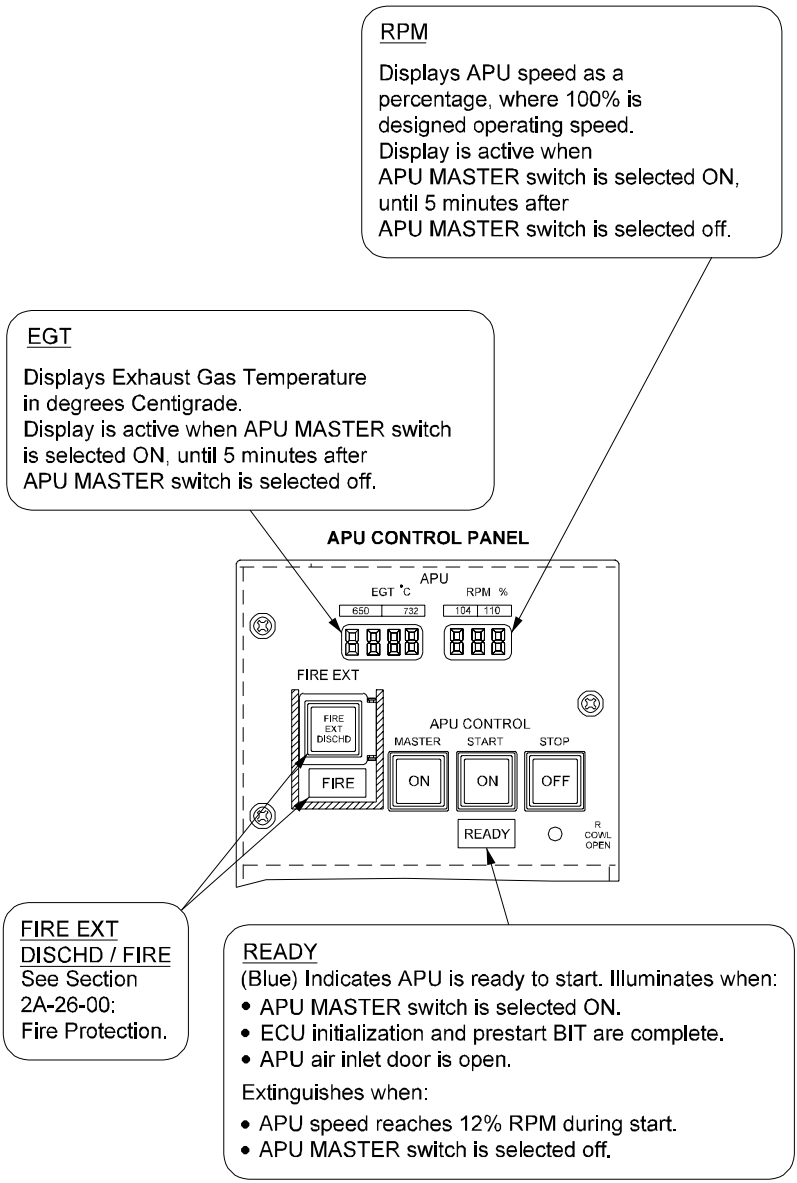

APU Control Panel
Figure 8

START
ON:
- Switch legend illuminates (Blue).
- APU start is initiated.
- If above 35000 feet, BAAV opens (start delayed 15 seconds).
- Switch legend extinguishes at starter cutout.
- If APU is in cool-down mode (prior to shut down), depressing START switch returns APU to on-speed condition (100% RPM).

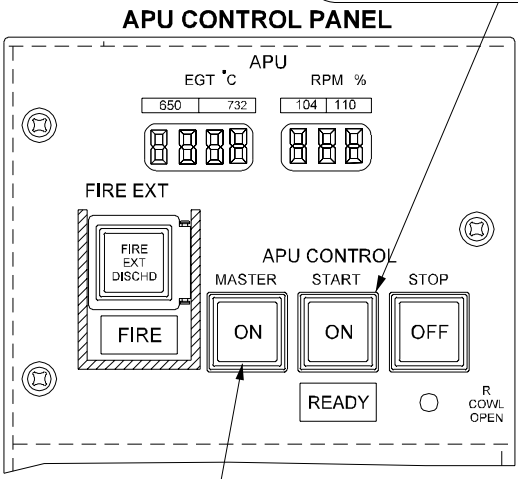

MASTER
ON:
- Switch legend illuminates (Blue).
- ECU initializes and performs prestart BIT.
- Oil temperature is sensed and reported.
- APU air inlet door opens.
- APU fuel shutoff valve opens.

OFF:
- Switch legend extinguishes.
- APU fuel shutoff valve closes.
- If APU is running, it immediately shuts down.

35081F00

APU Control Panel
Figure 9

APU CONTROL PANEL

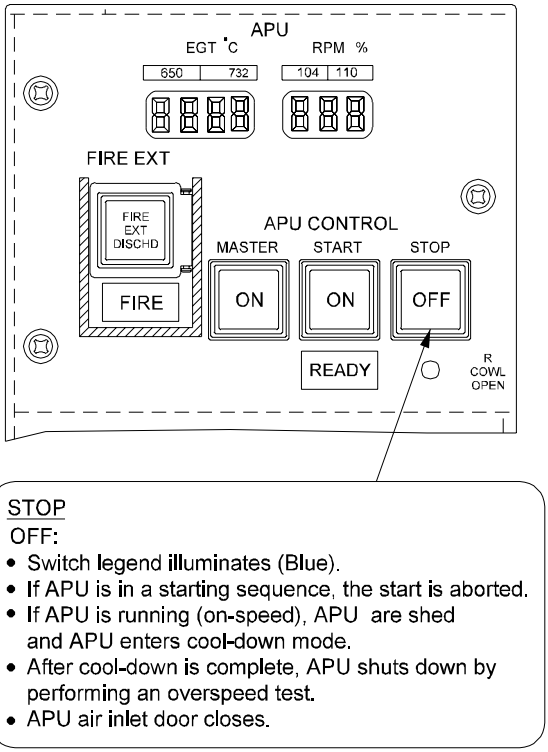

35082F00

APU Control Panel
Figure 10

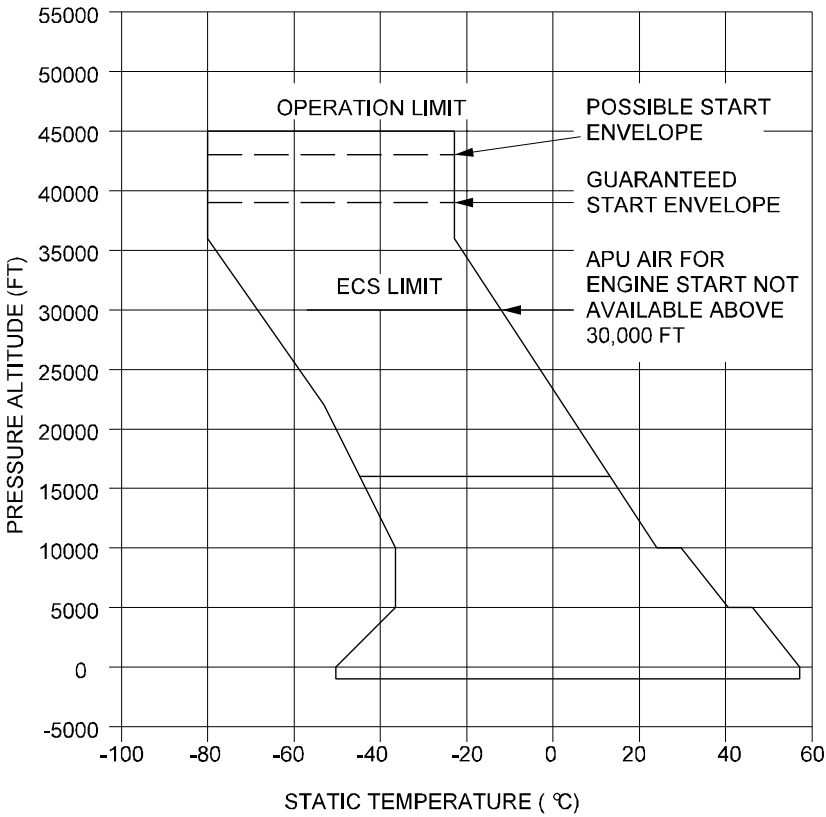

43211F00

APU Start and Operating Envelope
Figure 11