The avionics system (Figures 5-48, 5-49 and 5-50) includes the following subsystems:

- Air Data System
- Attitude/Heading Reference System (AHRS)
- Electronic Flight Instrument System (EFIS)
- Engine Indication and Crew Alert System (EICAS)
- Flight Control System (autopilot)
- Integrated Avionics Processor System (IAPS)
- Maintenance Diagnostics System
- Radar altitude System
- Radio System
- Weather Radar System
- FMS

Optional equipment includes:

- Dual Radar Control
- Third Attitude Source
- Dual Radio Altimeter
- Third Comm
- TCAS II System
- Dual ADF
- FMS 3
- EGPWS

8 Mar 2006

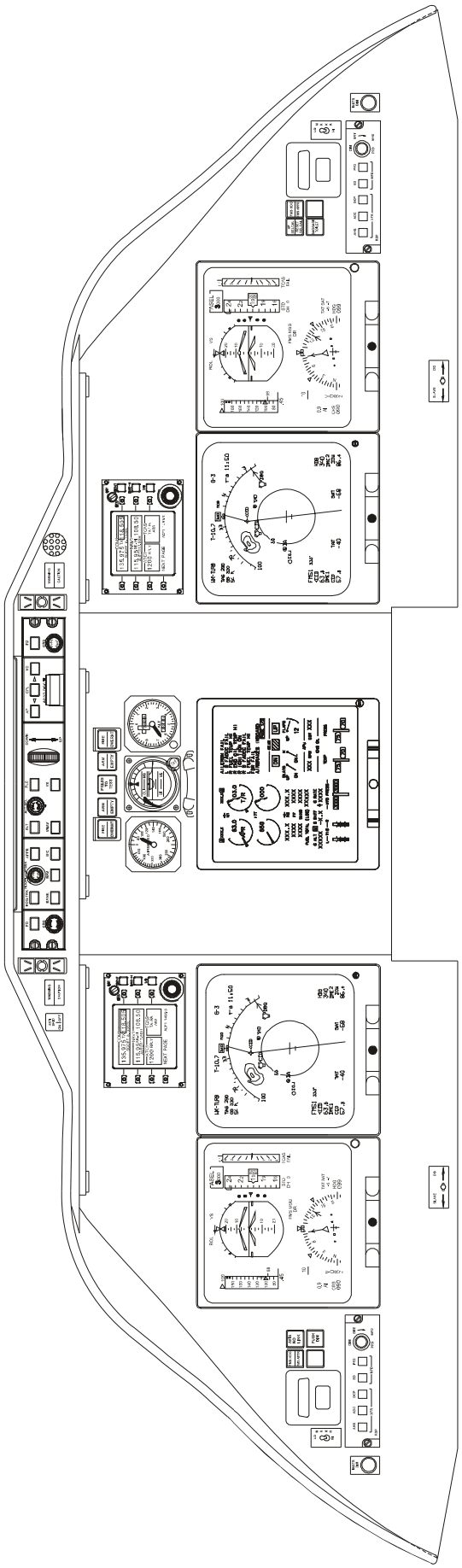

**Figure 5-48. Instrument Panel**

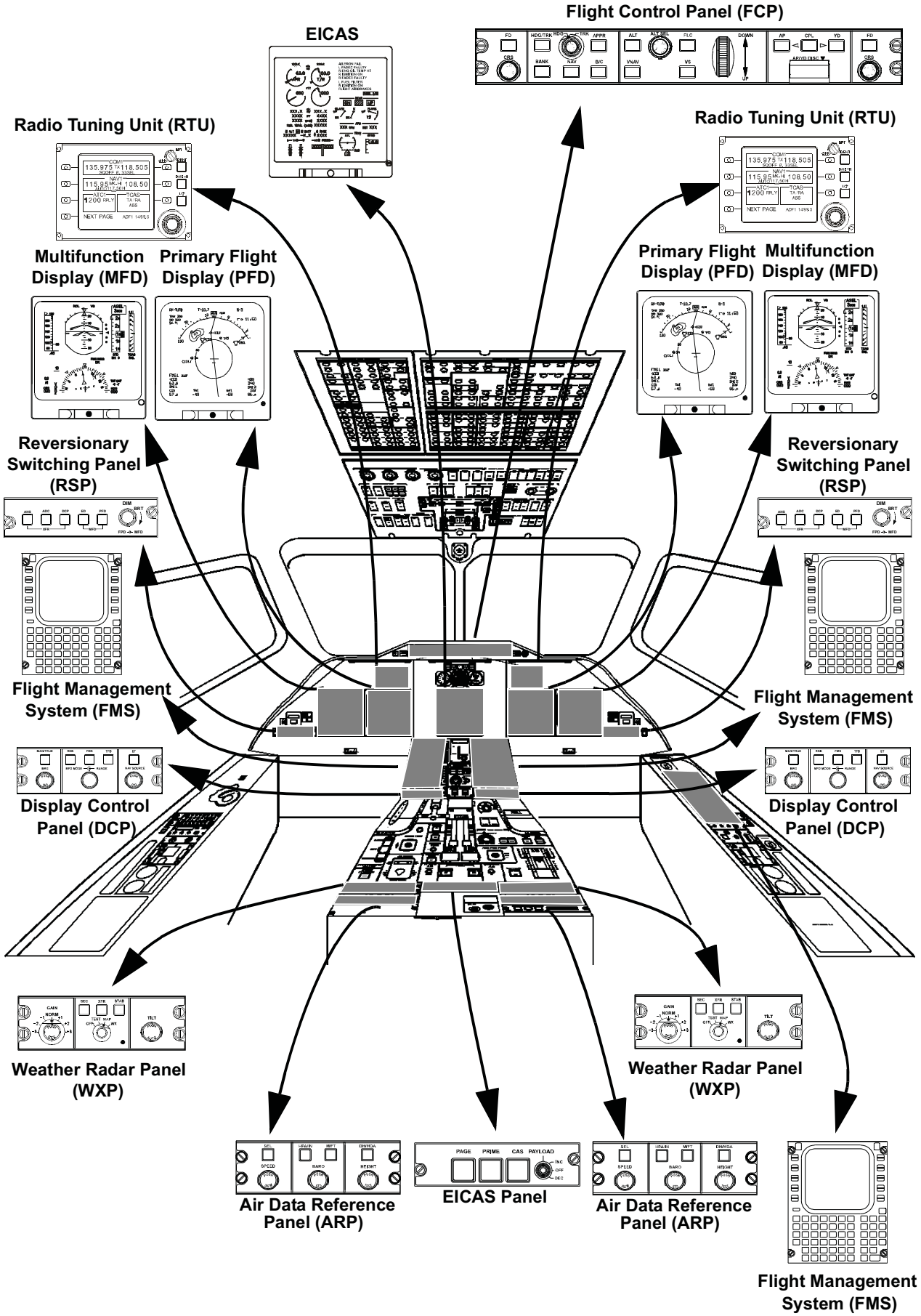


**Figure 5-49. Avionics System Component Locations**

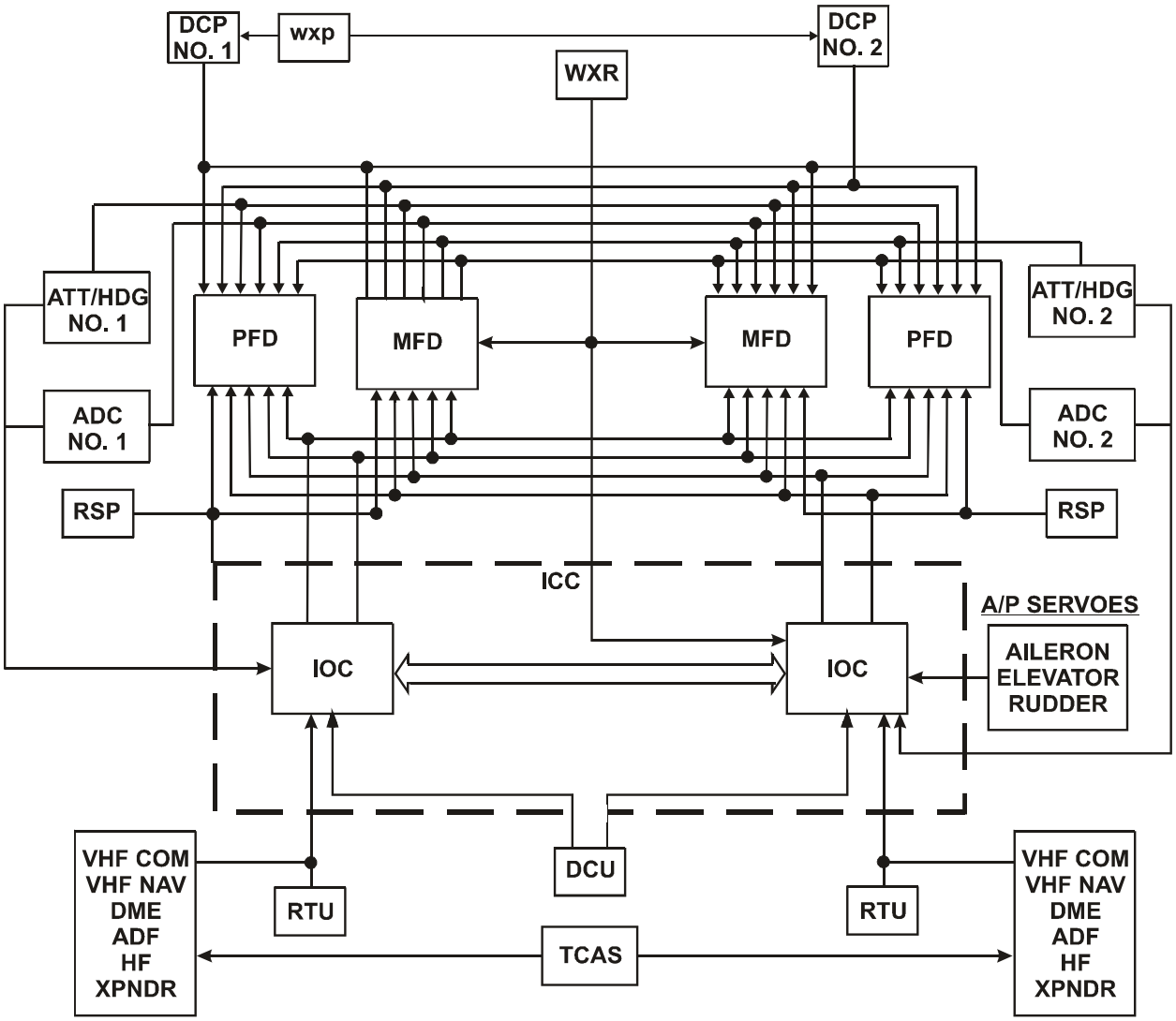


**Figure 5-50. Avionics System - Schematic**

## AIR DATA SYSTEM

The Air Data System consists of the following:

- Dual ADC-850C Air Data Computer
- Dual ARP-4002 Air Data Reference Panel

The ADC-850C Air Data Computer receives static air pressure ($P_s$), total air pressure ($P_t$), and temperature measurement from the appropriate airplane sensors to compute the air data parameters. The Air Data Computer processes total and static pressure and temperature information, along with programmed aircraft data on static source error correction (SSEC) and maximum allowable airspeed ($V_{MO}$/$M_{MO}$) to digitally compute the parameters listed below. The programmed aircraft data resides in the Aircraft Configuration Module (ACM).

The primary outputs provided by the ADC-850C are:

- Pressure altitude
- Barometric altitude
- Baro altitude correction
- Vertical speed (V/S)
- Airspeed (IAS/CAS)
- Mach
- Maximum Airspeed
- Maximum Mach
- True Airspeed (TAS)
- Total Air Temperature (TAT)
- Static Air Temperature (SAT)
- Preselected altitude
- Altitude alerts
- VS reference
- Airspeed reference
- Mach reference
- IAS trend vector
- Secondary speed references ($V_1$, $V_2$, etc.)

Pressure altitude is used for transponder and flight guidance programming applications. Baro corrected altitude is sent to the flight guidance computer for use in the altitude preselect mode.

Altitude for transponder use is provided via a serial digital bus. This altitude data is provided through the RTU's
The ADC-850C provides outputs to the flight control system, attitude heading reference system, electronic flight instrument displays, navigation systems and other aircraft subsystems.
The ADC performs an extensive self-test as part of its initialization routine. To further ensure the integrity of the system, the altitude and airspeed computation channels are independently and continuously monitored after initialization.

In addition the ADC provides several relay outputs. These are defined below.

## ADC Valid

The ADC-850C contains a set of form "C" relay contacts to provide a warning function for the annunciator. The relay associated with these contacts is energized for the computer valid condition.

## Overspeed Warning

The ADC-850C contains a set of isolated relay contacts which are normally open and will close when IAS exceeds $V_{MO}$ or $M_{MO}$.

## Outputs to Avionics and Aircraft Systems

The Air Data System provides ARINC 429 interfaces to the following systems:

- Electronic Flight Instruments
- Autopilot/Flight Guidance Computer
- Attitude Heading Reference

- Full Authority Digital Engine Controller
- Weather Radar

## ARP-4002 Air Data Reference Panel

The ARP-4002 operates with the ADC-850C air data computer and the EFD-4077 electronic displays. The air data parameters controlled from the panel are displayed on the Primary Flight Display (PFD).

The ARP-4002 Air Data Reference Panel is shown in figure 5-51. The ARP-4002 contains four pushbuttons and three rotary knobs, with integral pushbuttons:

SEL SPEED pushbutton/knob - Enables V speed selection through a menu of V speeds as follows:

- $V_1$
- $V_R$
- $V_2$
- $V_T$ (target speed - pilot reminder only)
- $V_{Bug}$ (autopilot speed reference)

The selected speed is displayed on the airspeed scale on the PFD. $V_1$ $V_R$ and $V_2$ are only available on the ground. In flight, only $V_T$ and $V_{Bug}$ are available. After 5 seconds of inactivity of both pushbutton and knob, the selected V speed reverts to $V_{Bug}$.

The speed reference may be manually selected using the integral center pushbutton switch in the SPEED knob. Each push of this switch shall toggle the reference between IAS and Mach. The transition between IAS and Mach is controlled automatically by the ADC-850C at 30,000 ft.

(Continued)

HPA/IN pushbutton/knob - sets the barometric reference. Each press toggles the reference between hecto Pascals and inches of mercury. The selected reference is displayed on the PFD.

The barometric setting is set using the rotary BARO knob. Pressing PUSH STD button selects standard pressure.

M/FT pushbutton - Used to enable/disable metric display of altitude and preselected altitude. Each press alternately enable/disable the metric display. When enabled, the metric display is in addition to, not in place of, altitude displayed in feet.

DH/MDA HEIGHT pushbutton/knob - DH/MDA pushbutton selects the mode, and provides appropriate annunciation and digital readout of the selected mode on the PFD. The HEIGHT knob provides the increase/decrease function for the digital readout of DH and MDA. using the knob causes the annunciation and readout to be displayed, if they are not already displayed (by pressing the DH/MDA pushbutton or descent below 2500 feet radar altitude). Once selected, the annunciation and readout remains active for five seconds after selection.

The center pushbutton of the HEIGHT knob is used to initiate the EFIS flag test on ground or the radio altimeter test in flight. The EFIS flag test is only performed on the ground (as determined by the PFD).

BARO / STD BARO knob - adjusts altimeter setting. The altimeter setting is displayed below the altitude scale on the PFD. Pressing STD BARO button selects standard altimeter setting of 29.92 in. Hg / 1013 mb; the displayed setting is replaced by **STD** and changes the selected altitude readout from feet display to three-digit flight level readout.

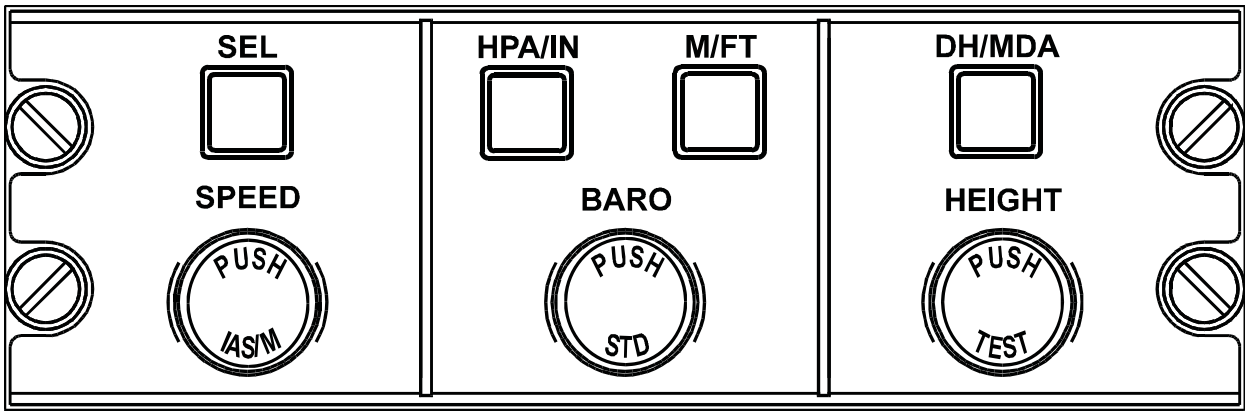


**Figure 5-51. ARP-4002 Air Data Reference Panel**

## ATTITUDE HEADING REFERENCE SYSTEM

The AHS-85E Attitude Heading Reference Subsystem consists of the following:

- AHC-85E Attitude Heading Computer
- ICU-85 Internal Compensation Unit
- FDU-70 Flux Detector Unit

The AHC-85E is a strap down reference system that generates angular rate and linear acceleration about the body axis of the aircraft, and digitally processes this data to obtain 3-axis angle, rate, and acceleration information.
The AHC-85E contains two inertial sensors, as well as the computation and I/O circuits required to generate the system outputs. The inertial sensors provide rate and accelerometer sensing in all three axes.

AHS-3000 Attitude Heading System is installed with MOD 7035. It is a solid state Strap-Down attitude heading reference system utilizing a quartz based inertial sensor technology. The primary functions of the AHS-3000 Attitude Heading System are: to provide measurements of the aircraft pitch, roll and heading Euler angles for use by the flight deck displays, flight control and management systems as well as other avionics equipment. In addition, high quality body rate, Euler rate and linear acceleration outputs are provided. The AHC-3000 units are installed in the aft left hand side of the cabin, (in same approximate location as the AHC-85E). The FDU-3000 flux detectors are installed in the wings, (same location as the FDU-70). On each pilot and copilot panels, SLAVED/DG and LEFT/RIGHT slewing switches are installed.
The AHRS AHS-3000 system consists of the following main components:

- AHC-3000 Attitude/Heading Computer
- FDU-3000 Flux Detector Unit
- ECU-3000 Compensator Unit

The FDU70 is a 2 axis sensor that detects the horizontal component of the earth's magnetic field. The flux detector uses a pendulous sensing element to detect the direction of the earth's magnetic field. The sensing element consists of a pair of orthogonal coils. The coils generate outputs that are proportional to the sine and cosine of the aircraft magnetic heading.
A weight on the bottom of the sensing element provides positive erection of the sensor by gravity. While erected, only the horizontal component of the earth's magnetic field is detected, but since the unit is subjected to aircraft accelerations and vibrations, the flux detector output is averaged and used only as long term information. The sensing element is immersed in a fluid filled container for damping
AHRS alignment starts at avionics power up and lasts about 75 seconds. The aircraft must not be moved during alignment. During alignment, **ATT** flag is displayed on PFD and the heading scale rotate from north through 360$^{o}$. The test ends when horizon is displayed.

The AHRS heading is normally slaved to the flux detector heading. However, the AHC-85E has a DG (directional gyro) mode that can be activated by the Compass Control and Compensation Unit. The DG mode also provides a fast slave function whenever it is switched from DG mode to slave mode.

SLAVED/DG switch - used to select either the slaved mode (slaved to FDU-70) or the DG mode (the long-term input from FDU-70 is not used). The DG mode is intended for short term operation near magnetic anomalies, and is not intended for use as a long term heading reference.

Slew switch - has a momentary action operational in both the slaved and DG modes. When operating in DG mode, it is used to correct for left and right heading drift. When operating in the SLAVED mode, it also causes the heading computations to slew toward the selected direction, but when the switch is released, the heading will slowly slave back to the heading sensed by the FDU-70. The SLEW buttons slew at 1 degree/second for the first 2 seconds, and then slew at 15 degrees/second

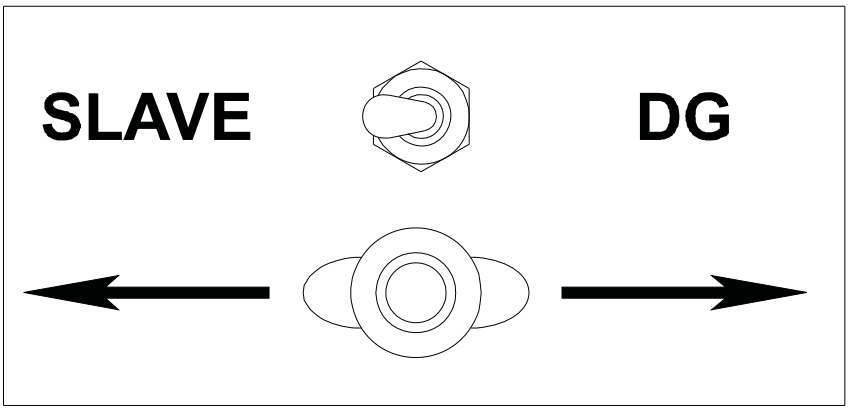


**Figure 5-52. Compass Control and Compensation Unit**