2A-31-10: General

The Gulfstream IV indicating / recording system provides the flight crew with positive control and visible operational indications of integrated aircraft systems. It also provides independent, accurate time displays necessary for any timed flight maneuvers. Visible and aural annunciations are presented to the flight crew in the form of messages and tones categorized as warning, caution and advisory. The system also receives, processes, records and displays data from associated aircraft systems.

The indicating / recording system is divided into the following subsystems:

- 2A-31-20: Cockpit Clocks System
- 2A-31-30: Flight Data Recording System
- 2A-31-40: Central Warning System
- 2A-31-50: Central Display System

2A-31-20: Cockpit Clocks System

1. **General Description:**

   The cockpit clocks provide accurate time displays necessary for any timed flight maneuvers. This includes emergency turn coordination when operating on standby instruments.

2. **Description of Subsystems, Units, and Components:**

   There are two cockpit clocks: #1 and #2 (commonly referred to as pilot's and copilot's), located on the left and right side of the flight panel, respectively. They are capable of displaying the following types of time:

   - Greenwich Mean Time (GMT)
   - Local Time (LT)
   - Flight Time (FT)
   - Elapsed Time (ET)

   Each clock has a two inch digital display with a microprocessor-controlled chronometer and incandescent lighting. Conventional time is displayed in hours and minutes. Chronometer time is displayed in minutes and seconds. Both types of time are displayed in decimal form.

   Each clock continues to receive power in all electrical power configurations down to and including the Emergency 28 VDC bus. Internal batteries are also installed to ensure operation in the event of a total loss of aircraft power. When fully charged, the internal batteries can power the clocks for up to 30 days.

3. **Controls and Indications:**

   (See Figure 1.)

   A. **Circuit Breakers (CBs):**

Circuit Breaker Name:	CB Panel:	Location:	Power Source:
CLOCK #1	CP	H-14	EMER DC Bus 1A
CLOCK #2	CP	I-14	EMER DC Bus 2C

4. Limitations:

There are no Flight Manual limitations established for cockpit clocks system at the time of this revision.

TO SET GMT/LT/ET:

1. Depress SELECT key until desired time mode is displayed.
2. Depress SELECT and CONTROL keys simultaneously until digit in left-most column begins to flash.
3. Depress CONTROL key until desired digit is displayed in selected column.
4. Depress SELECT key to move to the next column. Repeat steps 3 & 4 as necessary.
5. Depress SELECT key after right-most digit column is set to return to normal function.

TO RESET FT:

1. Depress SELECT key until FT mode is displayed.
2. Depress and hold CONTROL key until FT displays 99:59, then release CONTROL key.

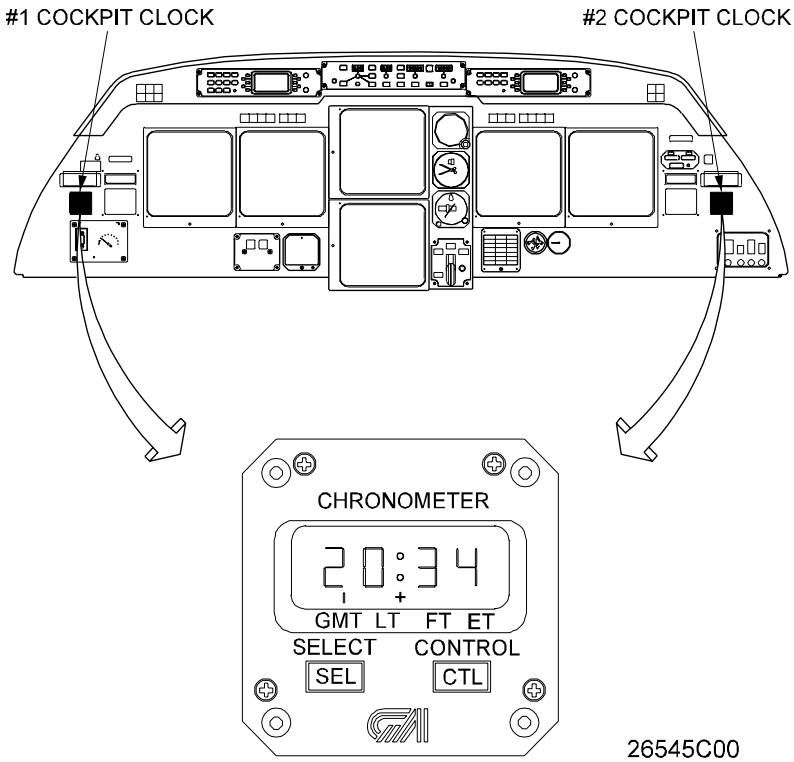

Cockpit Clocks (Typical)
Figure 1

2A-31-30: Flight Data Recording System

The Gulfstream IV flight data recording system provides a means to receive, process and store airplane operational information. The stored information is then protected so that it may later be retrieved for historical, investigative or decision-making purposes.

The flight data recording system is described in the following subsections within this section:

- 2A-31-31: Flight Data Recorder System (airplanes Serial Number [SN] 1183 and subsequent)
- 2A-31-32: 'G' Monitor System (airplanes SN 1034, 1156 and subsequent and airplanes SN 1000 through 1155 with Aircraft Service Change [ASC] 118)

2A-31-31: Flight Data Recorder System

1. **General Description:**

   On airplanes SN 1183 and subsequent, a solid-state digital flight data recorder system is incorporated to receive, process and record parameters relating to airplane operation and store the data in a protected environment.

   The Avionics Standard Communications Bus (ASCB) is the primary source of airplane flight data for the flight data recorder system. Parameter data generated by airplane systems or transducers (sensors) is transmitted to the recorder system in digital ARINC 429 or analog/discrete signal format. The data is converted to a common digital format for recording. All data acquisition and format conversions are accomplished within the flight data acquisition unit, which then transmits reformatted data to the flight data recorder, where it is stored until erased.

   The flight data recorder system consists of the following units and components:

   - Flight Data Acquisition Unit
   - Flight Data Recorder
   - Underwater Locating Beacon
   - Flight Data Recorder Impact Switch
   - Flight Data Recorder Maintenance Ground Override Switch
   - Flight Data Entry Panel
   - Flight Data Recorder Switch Panel

2. **Description of Subsystems, Units and Components:**

   A. **Flight Data Acquisition Unit:**

   The flight data acquisition unit, located in the right hand radio rack, accepts flight data information sent from the sensors listed below. It then processes the data and sends it to the flight data recorder for recording. Sensors providing input to the flight data acquisition unit are the:

   - Triaxial accelerometer
   - Left and right spoiler position sensors
   - Left and right aileron position sensors
   - Elevator position sensor
   - Elevator trim tab position sensor
   - Rudder position sensor

- Flaps position sensor

There are three fault indicator lights on the front panel: CAUTION, DFDR FAULT and FDAU FAULT. (See Figure 2.) The CAUTION indicator light is not functional for the GIV flight data recorder system. The DFDR FAULT indicator light is triggered by a malfunction in the flight data recorder circuitry. The FDAU FAULT indicator light is triggered by the flight data acquisition unit built-in test circuitry detecting a fault in the flight data acquisition unit. If either DFDR FAULT or FDAU FAULT indicator light comes on, it will be necessary to replace the flight data acquisition unit.

B. Flight Data Recorder:

The flight data recorder (Figure 3) records and stores digitized ASCB data. Data can be retrieved to assist in reconstruction of events relevant to an incident. The flight data recorder continuously records and retains data for a minimum of the previous 25 hours of operation. With electrical power removed, recorded data is retained for a minimum of two years. The flight data recorder is located in the aft equipment (tail) compartment. It is international orange in color for high visibility to aid in location.

ASC 423 is available for airplanes SN 1421 and subsequent requiring FAR Part 135 certification. This ASC upgrades the digital flight data recorder, allowing the recording of 57 parameters, in compliance with FAR Part 135.

C. Underwater Locating Beacon:

An underwater locating beacon (Figure 3) is attached to the flight data recorder. When activated by contact with water, it transmits a traceable acoustic signal to aid in underwater location of the airplane and/or flight data recorder. The underwater locating beacon receives power from a self-contained battery.

D. Flight Data Recorder Impact Switch:

The flight data recorder impact switch (Figure 4) removes power from the flight data recorder upon impact. Removing power prevents pertinent data from being erased from the flight data recorder. The impact switch is mounted in the tail compartment's right side, just outboard of the flight data recorder. Activation of the impact switch also causes an annunciator light on the switch housing to illuminate, remaining illuminated until the impact switch is reset. Resetting the impact switch is accomplished through the use of a reset switch, also located on the impact switch housing.

E. Flight Data Recorder Maintenance Ground Override Switch:

The flight data recorder maintenance ground override switch (Figure 5) is located in the top of the right hand radio rack and is labeled FDR MAINT GRD OVRD.

During normal operations, the flight data recorder begins recording during engine start when sensed oil pressure rises to 10 psi or greater on either engine. Thus, there exists the possibility that recorded data could be overwritten during extended ground engine runs. If the aircraft is stationary and the Weight-On-Wheels (WOW) system is in the GROUND mode, placing the FDR MAINT GRD OVRD switch in the OFF position allows maintenance personnel to inhibit flight data recording while aircraft engines are operating.

If the switch is inadvertently left in the OFF position, transfer of WOW to the

AIR mode (such as during takeoff) automatically returns the switch to the AUTO position, enabling flight data recording. Manual positioning of the switch to the AUTO position is also possible.

F. Flight Data Entry Panel:

The flight data entry panel (Figure 6) is located in the copilot's side console. It is used by the flight crew to enter a four digit flight number or leg number by positioning its four FLIGHT NO. thumbwheels. Marking of events in the recorder's memory is conducted using the EVENT switch. Faults related to the flight data recorder and flight data acquisition unit are annunciated by the amber DFDR and FDAU lights, respectively.

G. Flight Data Recorder Switch Panel:

The flight data recorder switch panel (Figure 7) is located adjacent to the flight data entry panel. The panel has a FDR MANUAL ON/OFF toggle switch and a blue indicator light.

The FDR MANUAL switch is normally left in the OFF position. Selection to ON hard-selects the flight data recorder to ON, permitting recording prior to engine start-up (i.e., prior to acquiring engine oil pressure). Selection to ON will also return the radio rack FDR MAINT GND OVRD switch to AUTO, if the OVRD switch was selected to OFF. The FDR MANUAL switch is normally selected to OFF after engine start but, if left ON, will recycle automatically to OFF after the airplane has landed to prevent being inadvertently left ON. Whenever the FDR MANUAL switch is ON, the blue indicator light is illuminated.

3. Controls and Indications:

(See Figure 2 through Figure 7.)

A. Circuit Breakers (CBs):

Circuit Breaker Name:	CB Panel:	Location:	Power Source:
FDR/FDAU	CP	C-7	ESS AC Bus
FDR CONT #1	CP	C-8	ESS DC Bus
FDR CONT #2	CP	C-9	BATT #1 Bus
POSN SNSRS	CP	C-10	#1 26 VAC XFMR Bus

B. Advisory (Blue) CAS Messages:

CAS Message:	Cause or Meaning:
FLIGHT REC FAIL	Flight data recorder has failed. It is normal for this message to be displayed until after an engine is started and 10 psi oil pressure is obtained.

C. Other Advisory Annunciations:

Annunciation:	Cause or Meaning:
ON annunciator illuminated adjacent to FDR MANUAL switch (copilot's side console).	FDR MANUAL switch is ON.
Flight data recorder impact switch annunciator light illuminated.	Flight data recorder impact switch has been activated.
FDAU annunciator illuminated on flight data entry panel.	Flight data acquisition unit fault or failure detected.

Annunciation:	Cause or Meaning:
DFDR annunciator illuminated on flight data entry panel.	Flight data recorder fault or failure detected.
FDAU fault indicator illuminated on flight data acquisition unit.	Flight data acquisition unit fault or failure detected.
DFDR fault indicator illuminated on flight data acquisition unit.	Flight data recorder fault or failure detected.

4. Operation:

Other than setting the appropriate flight number or leg number on the flight data entry panel, operation of the flight data recorder system is automatic. On power up, the flight crew should expect a blue FLIGHT REC FAIL advisory message to be displayed on CAS and an amber DFDR annunciator illuminated on the flight data entry panel. The CAS message will be cleared and the annunciator will extinguish when oil pressure increases to 10 psi or greater in either engine. Selection of the FDR MANUAL switch to ON will also clear the CAS message and extinguish the annunciator.

5. Limitations:

There are no Flight Manual limitations established for the flight data recorder system at the time of this revision.

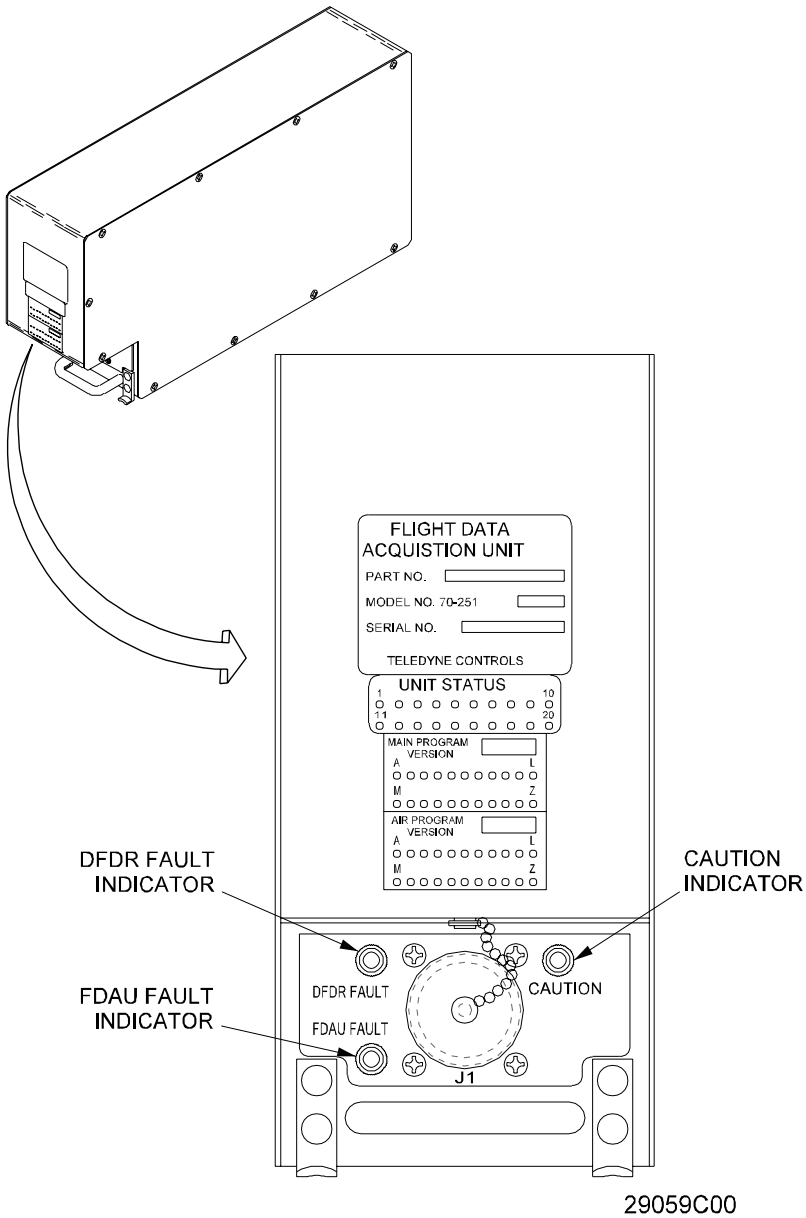

Flight Data Acquisition Unit Indicators
Figure 2

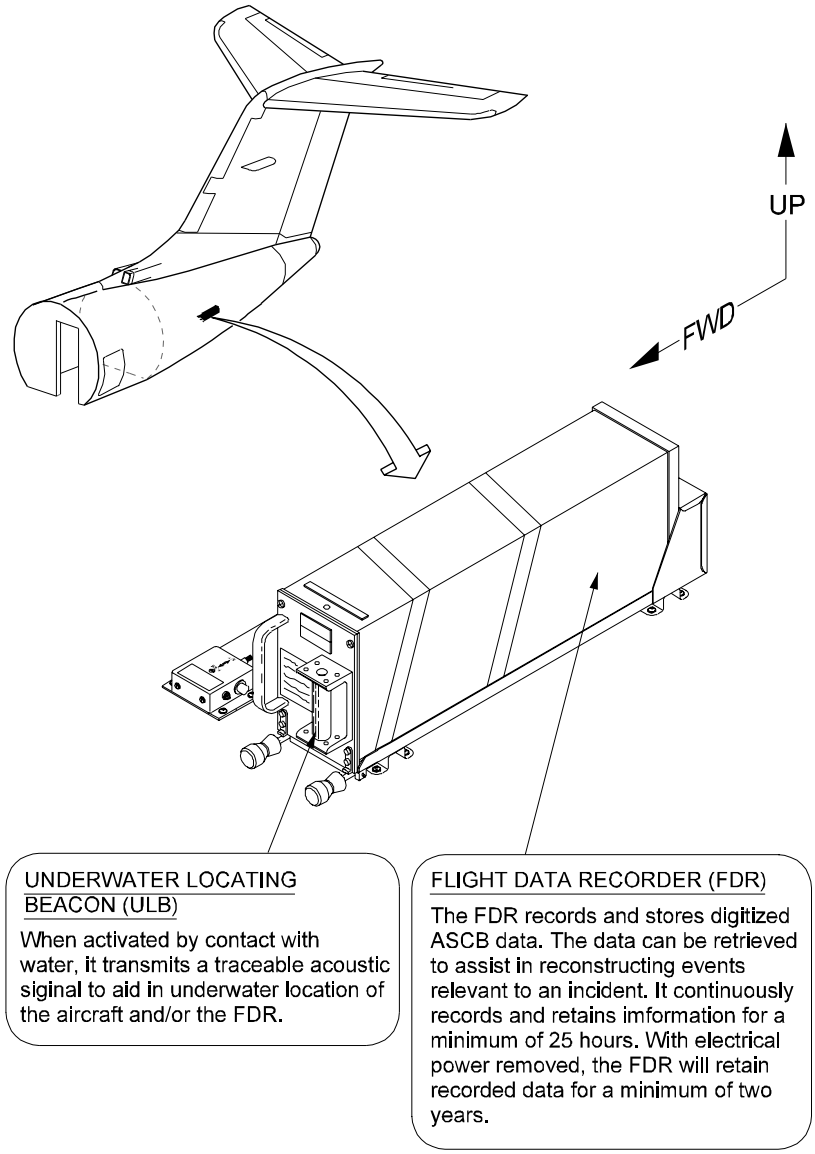

Flight Data Recorder With Underwater Locating Beacon
Figure 3

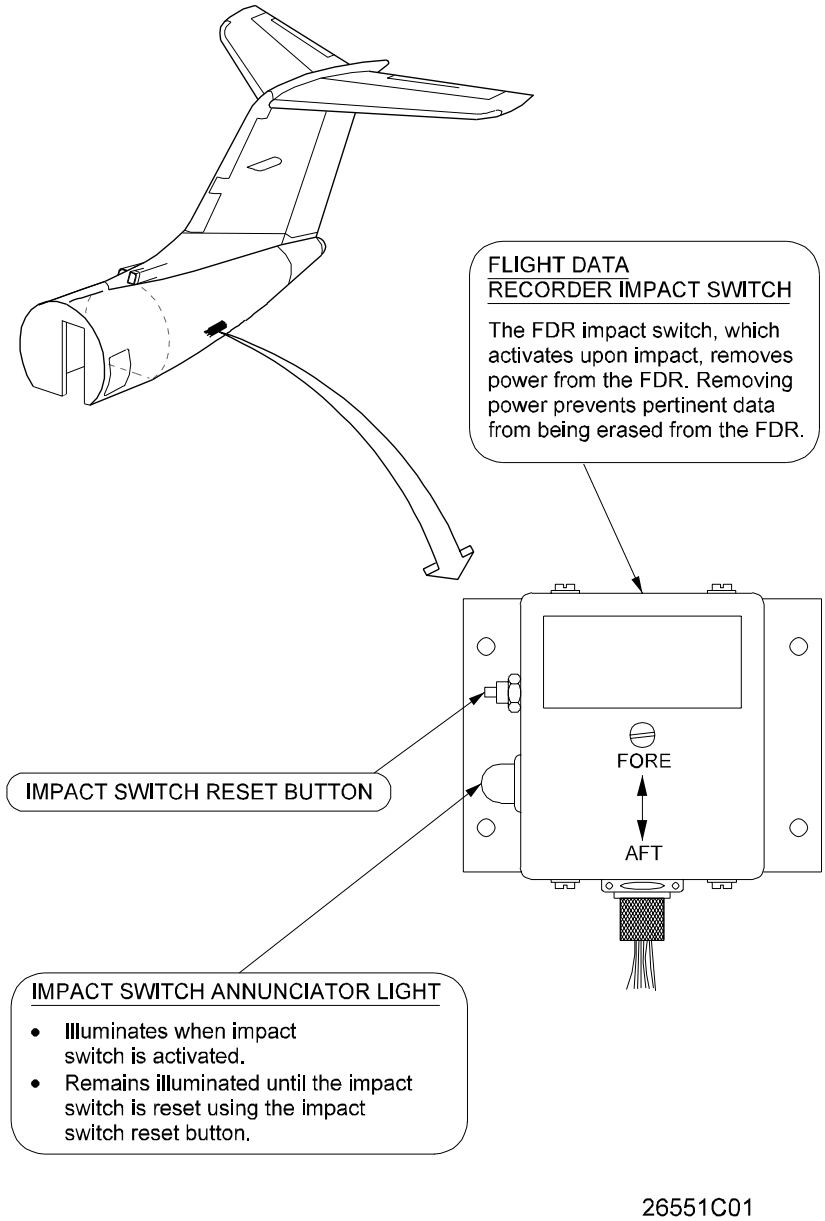

Flight Data Recorder Impact Switch
Figure 4

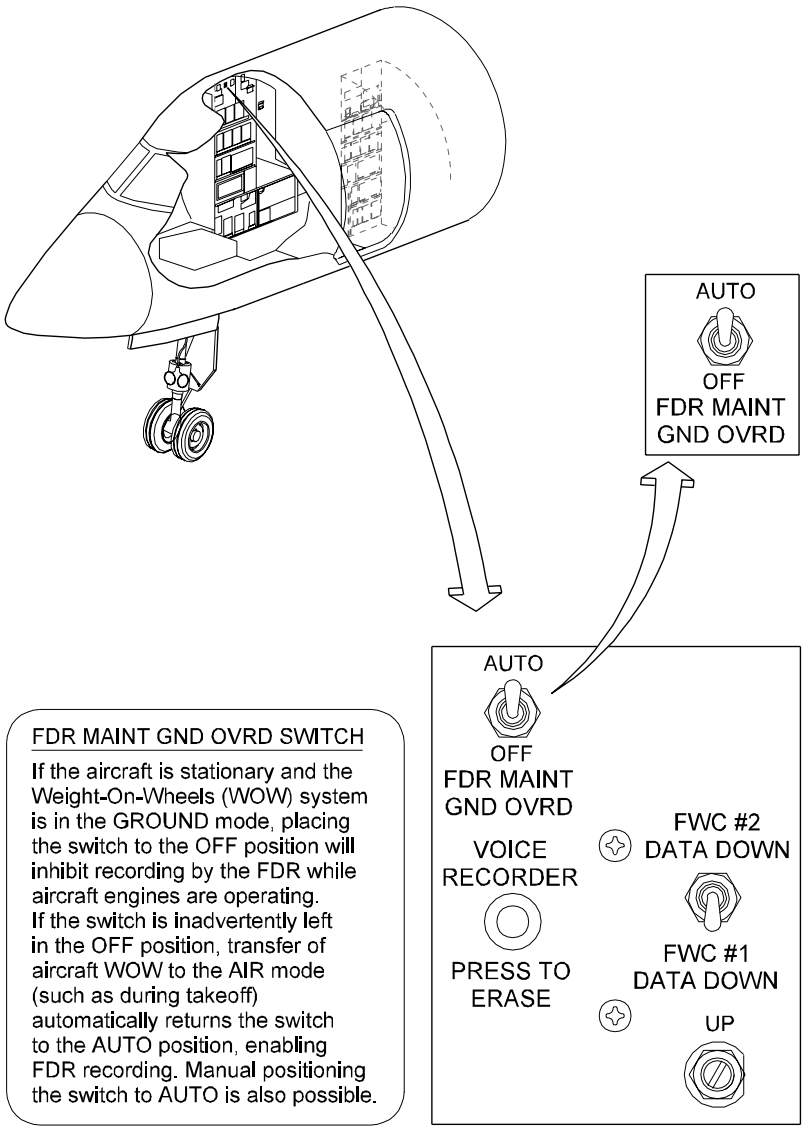

Flight Data Recorder Maintenance Ground Override Switch
Figure 5

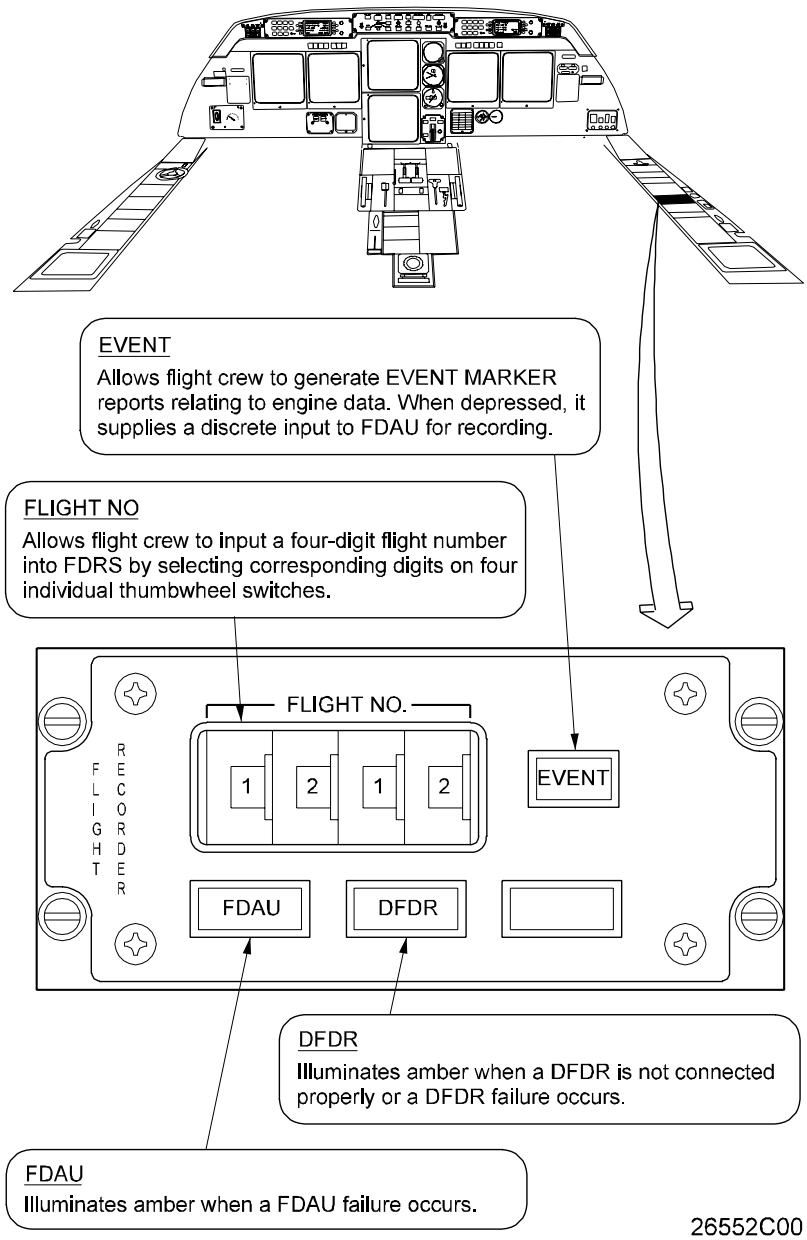

Flight Data Entry Panel
Figure 6

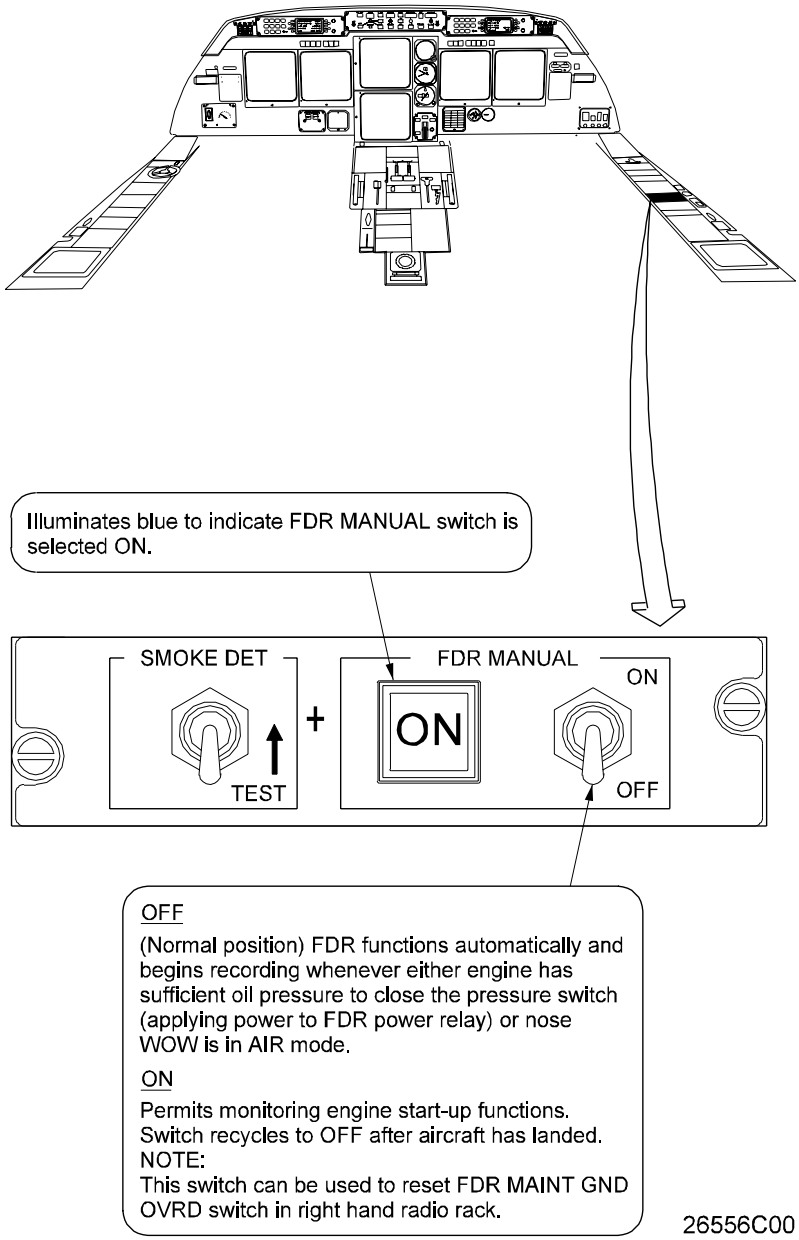

Flight Data Recorder Switch Panel
Figure 7

2A-31-32: 'G' Monitor System

1. **General Description:**

   Airplanes SN 1034, 1156 and subsequent and airplanes SN 1000 through 1155 with ASC 118 incorporated have a gravity force ('G') monitor system to record the maximum vertical acceleration experienced by the airplane during landing. Data collected by this system is used to assist in determining the requirement for either overweight or hard landing inspections.

   The monitoring system is activated during approach at 50 ft radio altitude with the landing gear extended. The system is active until the nose gear nutcracker signals weight-on-wheels. The maximum acceleration sensed, while the system is active, is recorded by the computer. Once deactivated by nutcracker logic, the system remains deactivated until the subsequent approach and landing, when activation criteria are again satisfied.

   The recorded acceleration will be affected by normal occurrences experienced between main gear touchdown and nose gear nutcracker ground mode logic. These occurrences include but are not limited to:

   - Ground spoiler deployment
   - Rough, bumpy runways
   - Travel through runway intersections
   - Travel across arresting cable hardware housing

   The above items can add 0.2 to 0.3 'G' to the touchdown acceleration and are considered valid loads on the airplane structure. Normal landing 'G' readings may vary from 1.3 to 1.6 'G'.

   The established limit to determine the requirement for the hard landing inspection for airplane weights up to and including maximum landing weight is 2.0 'G' (2.3 'G' for airplanes SN 1214 and subsequent and airplanes SN 1000 thru 1213 with ASC 190). The limit to determine the requirement for an overweight landing inspection for airplane weights exceeding maximum landing weight decreases on a linear scale from 2.0 'G' to 1.6 'G' (2.3 'G' to 1.7 'G' for airplanes SN 1214 and subsequent and airplanes SN 1000 thru 1213 with ASC 190). The limit depends on actual airplane weight and assumes that extremely high side loads were not encountered during landing touchdown. If the actual 'G' recorded for the landing is within limits and no extremely high side loads were encountered at touchdown, no inspection is required. If extremely high side loads were encountered at touchdown, or the 'G' limit is exceeded, the flight crew shall log the event for maintenance action. See Figure 9 and Figure 10. For additional information, refer to Chapters 5 and 31 of the GIV Maintenance Manual.

2. **Description of Subsystems, Units and Components:**

   The system is comprised of three major components:

   - G-Meter Computer/Display
   - Accelerometer
   - G-Meter Fail Annunciator

   A. **G-Meter Computer/Display:**

      The G-meter computer (located in the right radio rack) retains the current landing plus the previous seven (7) landings in non-volatile memory. The recorded accelerations are read off the computer display.

      The G-meter computer display provides the flight crew with a method to

determine actual landing force encountered by the aircraft during the previous eight touchdowns. It consists of a Light Emitting Diode (LED) display, a DISPLAY ON/OFF switch and a MODE switch. These components are shown and described in Figure 8.

B. Accelerometer:

The system accelerometer is installed in the center forward portion of the wheel well at Fuselage Station 456.7. The accelerometer is capable of measuring from -3.0 to +6.0 Gs.

C. G-Meter Fail Annunciator:

The G-meter fail annunciator is located in the right hand system monitor panel above the right hand radio rack (incidentally shown in Figure 12). The annunciator illuminates whenever the G-meter system loses power and/or the system detects a fault.

3. Controls and indications:

See Figure 8.

A. Circuit Breakers (CBs):

Circuit Breaker Name:	CB Panel:	Location:	Power Source:
G-METER	CP	C-13	ESS DC Bus

4. Operation:

With the radio rack cover removed, the G-meter computer is seen mounted on the upper shelf of the right hand forward radio rack. When the DISPLAY SWITCH is placed to ON, all display digits will illuminate while the unit preforms a self test. After the self test is completed, the value for the most recent landing will be displayed.

The display readout is arranged as follows; the digit to the left is the landing number, 1 through 8, 1 being the most recent landing. The next 3 digits are the gravity force (“G”) readings from -3.00 to +6.00 Gs.

Each time the MODE switch is momentarily placed in the MEM position, the next landing’s value will be displayed in a last-in, first-out order, for the previous 8 landings.

The display can be reset by momentarily placing the MODE SWITCH in the RST position. This action involves only internal and front panel gravity force measurement as currently displayed and does not cause a reset of either the microcomputer or in any way modify information stored in the Electronically Erasable Programmable Read Only Memory (EEPROM).

5. Limitations:

A. Flight Manual Limitations:

There are no Flight Manual limitations for the ’G’ monitor system at the time of this revision.

B. System Notes:

Use Figure 9 or Figure 10 and readings from the G-meter computer to determine if hard landing or overweight landing inspections may be required.

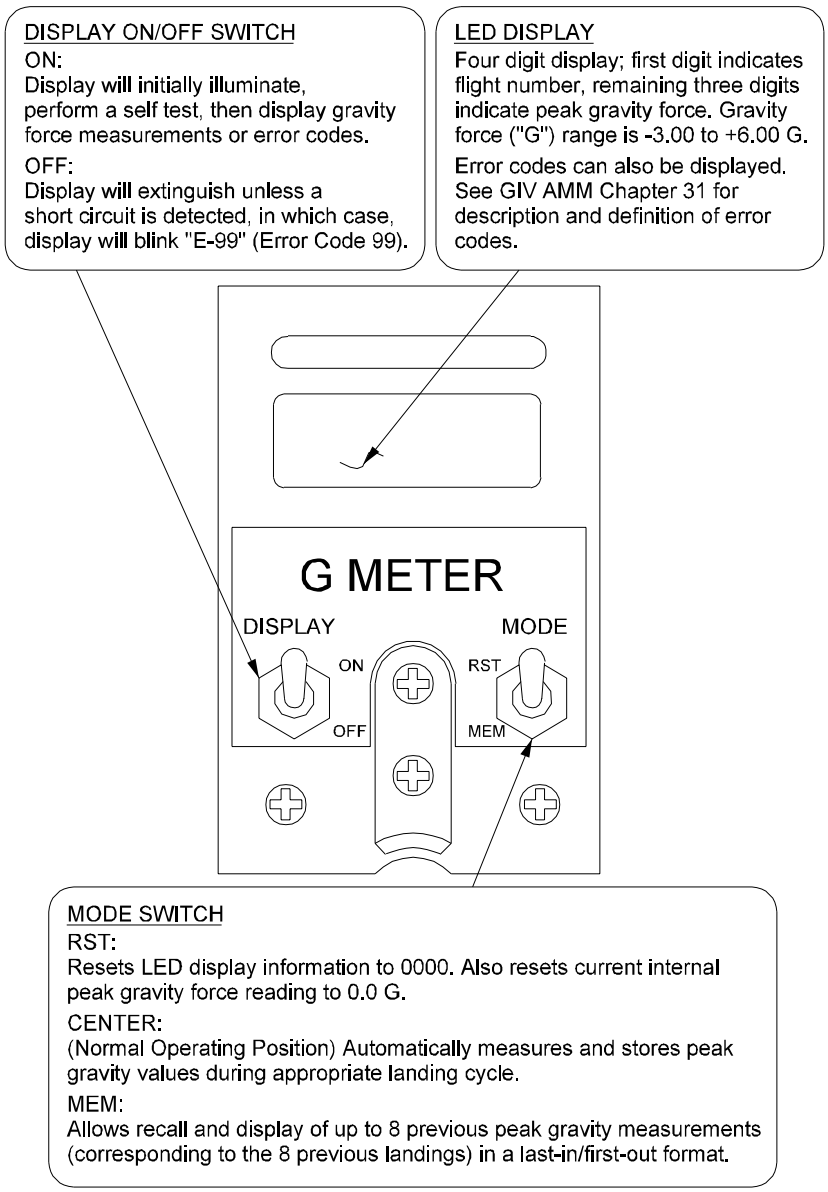

G-Meter Computer Display
Figure 8

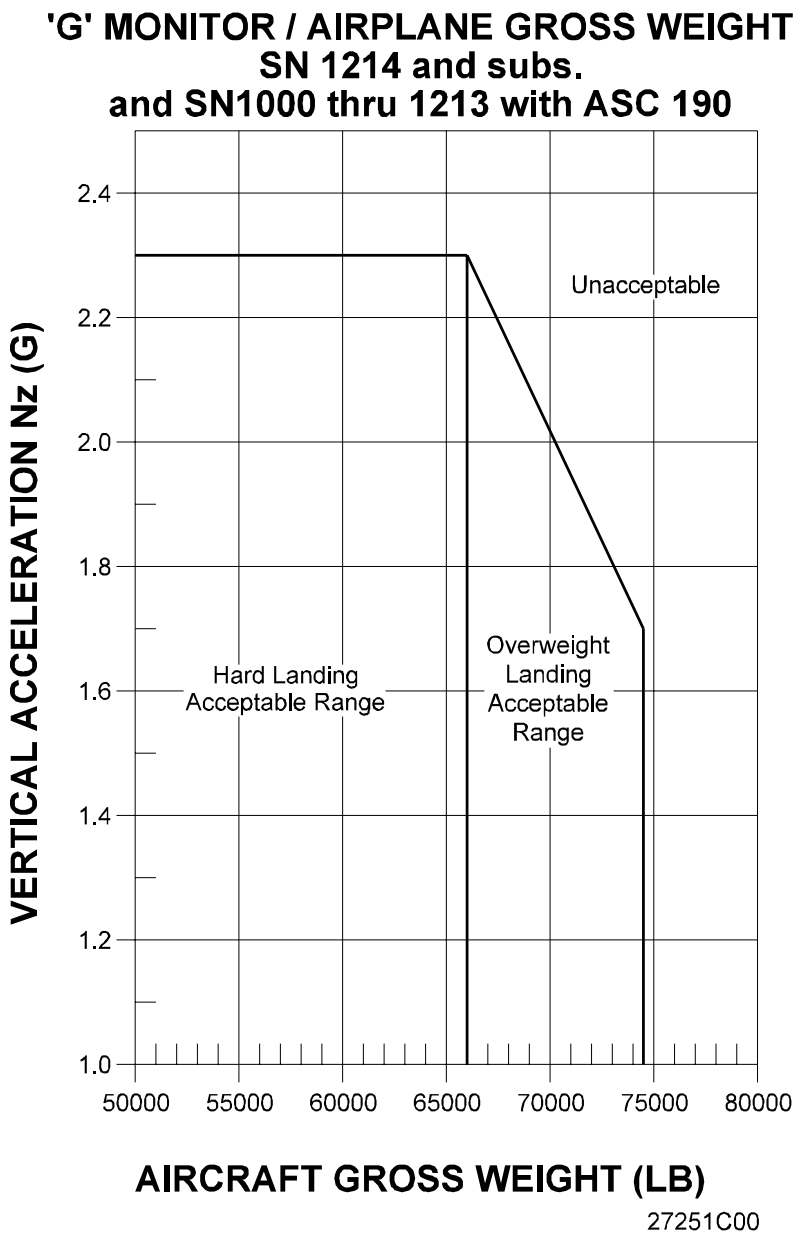

'G' Monitor/Airplane Gross Weight: SN 1214 & Subs, SN 1000-1213 With ASC 190
Figure 9

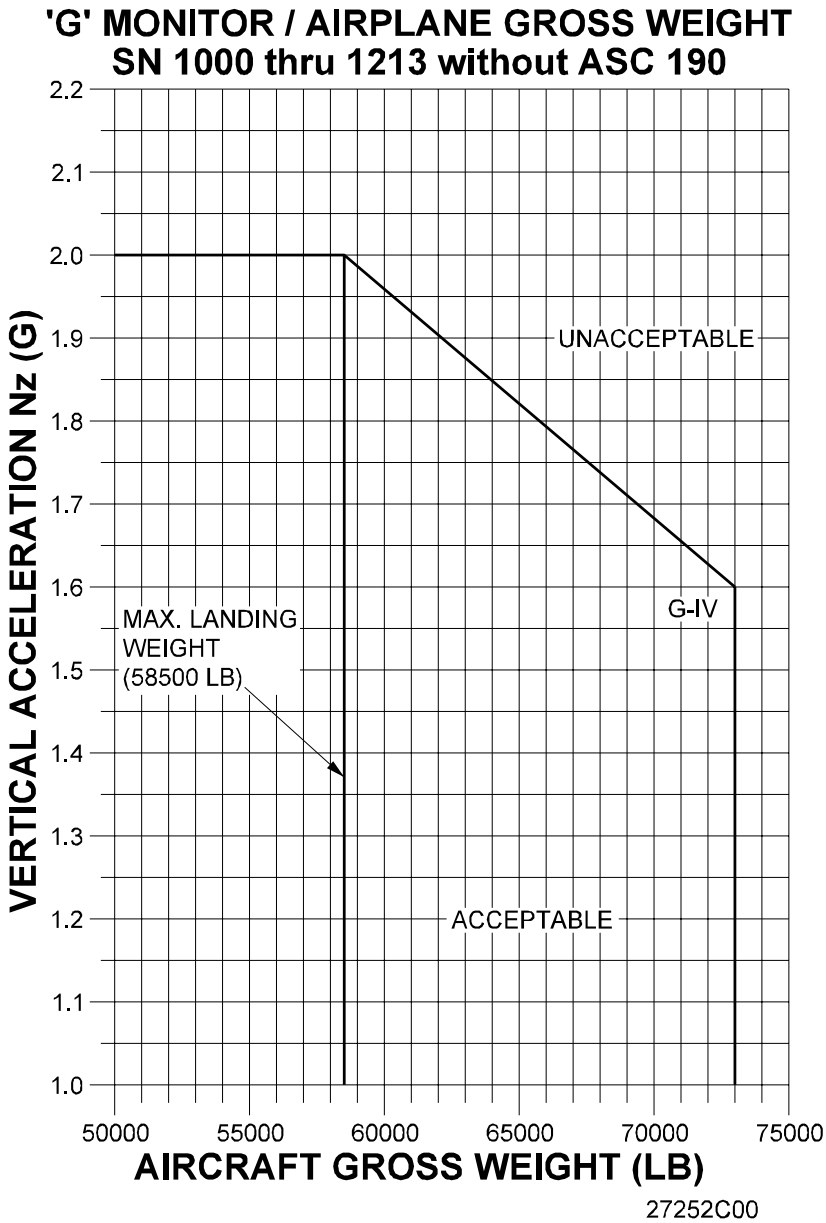

'G' Monitor/Airplane Gross Weight: SN 1000-1213 Without ASC 190
Figure 10

2A-31-40: Central Warning System

1. **General Description:**

   The Gulfstream IV central warning system provides the flight crew with indications of equipment status, operating conditions requiring action or indications that a system is in operation. Manual and automatic testing of the warning system indicators and indicating circuitry is also provided. Display of critical data is ensured through both automatic and manual reversionary features. Limited provisions for manipulation of display data based on personal preference are also included.

   The central warning system is one of the many systems integrated into Honeywell's SPZ-8000 (or SPZ-8400) Digital Automatic Flight Control System and as such cannot be adequately described in the space available here. For comprehensive reference material on the central warning system, refer to Honeywell's SPZ-8000 (or SPZ-8400) Digital Automatic Flight Control System Pilot's Manual for the Gulfstream IV. For the purposes of this system description, the following central warning system units and components will be discussed:

   - Avionics Standard Communications Bus
   - Bus Controllers
   - Fault Warning Computers
   - Data Acquisition Units
   - Standby Warning Lights Panel (SPZ-8000)
   - Warning/Caution Inhibition Panel
   - Tone Generator (SPZ-8000)
   - Tone Generator (SPZ-8400)
   - Maintenance Test Switch
   - Trend and Limit Monitoring System

2. **Description of Subsystems, Units and Components:**

   A. **Avionics Standard Communications Bus:**

   Two independent Avionics Standard Communications Buses (ASCBs) provide data transfer within the central warning system. Although movement of data across the buses has bidirectional capability, it can only occur in one direction at a time. Three bus controllers (one inside each symbol generator) control operation of both ASCBs.

   Systems deemed critical to airplane operation retain a private line as the primary means of communication and rely on ASCB as a backup.

   B. **Bus Controllers:**

   Bus controllers function by notifying subsystems, units and components when to transmit and receive across ASCB by assigning message priorities and inhibiting simultaneous transmissions.

   A bus controller is incorporated into each of the three symbol generators in order to equal the level of symbol generator redundancy. Each bus controller is independent of the other two and only one is active at any given time. The other two, if operable, are in a standby status. Bus controller No. 1 normally assumes control of ASCB and retains control until a fault or failure occurs. At that time, bus controller No. 1 would automatically go off-line and the next bus controller in sequence would

assume control of ASCB. In addition, a blue BUS CTLR 1-2-3 FL advisory message would be displayed on the Crew Alerting System (CAS).

In addition to bus monitoring, each bus controller performs a self-test at fault warning computer and bus controller power-up. The self-test is inhibited, however, if the airplane is airborne. Failure of a bus controller self-test causes a blue BC 1-2-3 TEST FAIL advisory message to be displayed on CAS (enabled only on the ground).

C. Fault Warning Computers:

Two fault warning computers are incorporated into the central warning system. They are designated Fault Warning Computer (FWC) 1 (installed in the left radio rack) and FWC 2 (installed in the right radio rack). Each FWC receives ASCB inputs consisting of identical versions of engine data, airplane systems data and other miscellaneous data. Each FWC then places the data through identical algorithms. FWC outputs are transmitted across ASCB to the three symbol generators used by the central display system.

Although both FWCs may be available and functioning properly, only one is in control at any given time. Should the FWC in control fail, the CAS messages section will be replaced by a red “X”. Reversion to the opposite FWC (as well as routine selection of the FWC in control) is accomplished by the flight crew using either display controller. With an operable FWC in control, CAS messages are returned and the failed FWC will be identified by a blue FWC 1-2 FAIL advisory message.

The fault warning computers also contain an electronic checklist module. This feature is described in Section 2A-31-50, Central Display System.

D. Data Acquisition Units:

Two data acquisition units are incorporated into the central warning system. Data Acquisition Unit (DAU) 1 is installed in the left radio rack and is dedicated to the left engine. DAU 2 is installed in the right radio rack and is dedicated to the right engine. Each DAU receives its dedicated engine data plus other miscellaneous airplane systems data across ASCB and then transmits the data back across ASCB to the three symbol generators used by the central display system.

Each DAU has two independent channels, A and B; only one of which is in control at any given time. Should the channel in control fail, a blue DAU 1A-1B-2A-2B FAIL advisory message will be displayed on CAS. Reversion to the opposite channel (as well as routine selection of the channel in control) is accomplished by the flight crew using either display controller.

E. Standby Warning Lights Panel (SPZ-8000):

SPZ-8000 equipped airplanes have a Standby Warning Lights Panel (SWLP) installed on the copilot’s inboard skirt panel. Its 21 capsules are all red and cover most of the subject areas addressed by the warning (red) CAS messages. Because of capsule or CAS message space constraints, message legends of duplicated subjects are similar, but not identical, so that confusion should not result.

The SWLP will operate continuously if manual (MAN) is selected. If operated in automatic (AUTO), the panel will operate whenever EICAS display is lost on DU 3 or 4. The AUTO-MAN switch is located on the bottom of the SWLP. Preflight checks (using the warning lights dimming

and testing) may be accomplished with the SWLP in AUTO or MAN mode.

The following warning messages are displayed on the SWLP:

L ENGINE HOT	R ENGINE HOT	REV UNLOCKED
L OIL PRESS	R OIL PRESS	GND SPOILER
L FUEL PRESS	R FUEL PRESS	ACFT CONFIG
L FUEL FILTER	R FUEL FILTER	AFT EQUIP HOT
L PYLON HOT	R PYLON HOT	CAB PRESS LOW
APU FIRE	FIRE DET LOOP	CABIN DOORS
SMOKE DETECT	FLAME DETECT	—

When activated, the SWLP capsules illuminate flashing. The master warning light ("W" switchlight on glareshield warning/caution inhibition panel) also illuminates. Depressing the illuminated master warning light causes the flashing SWLP capsule(s) to revert to steady display. They will remain illuminated until the fault is corrected. The standby warning lights panel is removed from SPZ-8400 equipped aircraft. These airplanes have display unit (DU) reversionary capability, allowing engine instruments and crew alerting system (EICAS) display on DU 2, 3, 4 or 5.

F. Warning/Caution Inhibition Panel:

The primary flight crew interface with the central warning system is the warning/caution inhibition panel. Installed on both sides of the flight panel glareshield, they are shown and described in detail in Figure 11. For the purposes of this discussion, however, only the function of the WARN INHIBIT switch will be described.

To prevent the flight crew from being distracted during certain phases of flight (such as during takeoff and landing), annunciations that would normally accompany CAS messages in some cases can be inhibited. This is accomplished through use of the WARN INHIBIT switch that, when selected, inhibits aural tones and illumination of the master warning/master caution switches. It should be noted at this point that display of messages on CAS cannot be inhibited; rather, it is only the aural tones and warning/caution inhibition panel switch illumination that would normally accompany the message.

With the airplane on the ground and at least one valid radio altimeter signal present, depressing either WARN INHIBIT switch enables the inhibit mode for takeoff. After climbing through 400 feet AGL and retracting the landing gear, the inhibit mode is automatically cancelled. The flight crew may again initiate the inhibit mode on final approach after the landing gear is extended and locked, provided at least one valid radio altimeter signal is present. In all other flight conditions, the inhibit mode cannot be activated.

The following list summarizes annunciation presentation with the inhibit mode enabled:

(1) In both SPZ-8000 and SPZ-8400 equipped airplanes, all advisory (single chime) aural tones are inhibited.

(2) In both SPZ-8000 and SPZ-8400 equipped airplanes, the aural caution tone (double chime) and master caution switch illumination are inhibited, **except** with the amber CPL DATA INVALID caution message.

(3) In SPZ-8000 equipped airplanes with the SWLP in automatic (AUTO), the aural warning tone (triple chime) and master warning switch illumination are inhibited in conjunction with the following five (5) messages:

- APU FIRE
- CABIN DFRN-9.8
- CABIN PRESSURE LOW
- DAU 1-2 MISCMP-MSG
- MAIN DOOR

(4) In SPZ-8000 equipped airplanes with the SWLP in manual (MAN) and SPZ-8400 equipped airplanes, it is not possible to inhibit the aural warning tone or illumination of the master warning switch.

G. SPZ-8000 Tone Generator:

A tone generator is installed to provide audible sounds, calling the attention of the flight crew to an associated message or condition. A tone generator test panel is installed on the copilot's side console for tone testing. The aural tones provided and test positions are:

Type of Aural Tone:	Condition:	Tone Generator Test Panel Position:
Horn	Landing Gear Unsafe	1
Cricket	Airplane Overspeed	2
Beep	Altitude Alert	3
1 Chime	CAS Advisory	4
2 Chimes	CAS Caution	5
3 Chimes	CAS Warning	6
Lo/Lo/Lo	Autothrottle Disconnect	7
Lo/Hi/Lo	Manual Autopilot Disconnect	8

Warning and caution CAS alerts can be silenced by pressing the associated switch on the warning/caution inhibition panel. Advisory CAS alerts cannot be manually silenced, but will automatically silence after two (2) seconds. Airplane overspeed cannot be silenced as long as the overspeed condition exists. The landing gear unsafe warning can be silenced, either manually or automatically, in all cases except when the flaps are fully extended without the landing gear being down and locked. The airplane has a radio altimeter-activated automatic horn silencing system that will function above 1200 ft AGL except when the flaps are fully extended without the landing gear being down and locked.

H. SPZ-8400 Tone Generator:

A tone generator is incorporated into each fault warning computer to provide audible sounds, calling the attention of the flight crew to an associated message or condition. Tone volume is adjusted from the TONE prompt on the TEST page of the pilot's display controller. The aural tones provided by the tone generator are:

Type of Aural Tone:	Condition:
Klaxon™ (Hi/Lo - Hi/Lo)	Landing Gear Unsafe

Type of Aural Tone:	Condition:
Cricket	Airplane Overspeed
Beep	Altitude Alert
1 Chime	CAS Advisory **(1)**
2 Chimes	CAS Caution
3 Chimes	CAS Warning
Lo/Lo/Lo	A/T Disconnect
Lo/Hi/Lo	Manual A/P Disconnect

NOTE(S):

(1) Only those messages not resulting from deliberate crew action.

Warning and caution CAS alerts can be silenced by pressing the associated switch on the warning/caution inhibition panel. Advisory CAS alerts cannot be manually silenced, but will automatically silence after one cycle. Airplane overspeed cannot be silenced as long as the overspeed condition exists. The landing gear unsafe warning can be silenced, either manually or automatically, in all cases except when the flaps are fully extended without the landing gear being down and locked. The airplane has a radio altimeter-activated automatic horn silencing system that will function above 1200 ft AGL except when the flaps are fully extended without the landing gear being down and locked.

The following CAS advisory messages do not generate a tone when activated:

AC EXT POWER	FMS 3 ACTIVE	ISOLATION VLV OPEN
APU ALT OFF	FUEL INT TANK OPEN	MAINT SWITCH ON
L-R COWL AI ON	FUEL XFLOW OPEN	SPD BRAKE EXTENDED
DC EXT POWER	GND SPOILER UNARM	TONE GEN 1-2 FAIL
EXT BATT SWITCH ON	IRS 1-2 HI LAT ALN	L-R WING AI
FGC NOT USING IRS 1-2		

I. Maintenance Test Switch:

A maintenance test switch is installed above the left and right radio racks (Figure 12). Airplanes having ASC 221 have an additional switch on the copilot's circuit breaker panel. The maintenance test switches are labeled MAINT TEST and are guarded to OFF. When any MAINT TEST switch is selected ON, advisory CAS messages that are normally suppressed can be viewed. Trend and limit monitoring is also inhibited. A blue MAINT SWITCH ON advisory message is also displayed to alert the flight crew that the MAINT TEST switch is on.

J. Trend and Limit Monitoring System:

Each fault warning computer contains a trend and limit monitoring function designed to record, store and display the following types of data:

- Engine exceedances of the following maximum limits:
  - Turbine Gas Temperature (TGT)
  - Low Pressure Turbine Speed (LP RPM)
  - High Pressure Turbine Speed (HP RPM)
  - Low Pressure Turbine Vibration (LP EVM)

    - High Pressure Turbine Vibration (HP EVM)
    - Parameter that tripped the exceedance monitor
- APU exceedances of the following maximum limits:
    - Turbine Gas Temperature (TGT)
    - Turbine Speed (RPM)
    - Parameter that tripped the exceedance monitor
- Brake temperature exceedances and time of occurrence
- Parameter that tripped the exceedance monitor

Trend data recording is used to monitor the long term histories and relative health of the engines and APU. Engine trend data is automatically recorded when the airplane reaches approximately 100 knots on takeoff, again when the airplane establishes steady cruise flight and thereafter at approximately ninety (90) minute intervals. APU trend data is recorded just prior to the first engine start of a flight. In addition to these trend recordings, an engine start log is maintained to track the number of engine starts.

Engine limit data (hereafter referred to as exceedance data) is recorded when a TGT, HP, LP or EVM limit is exceeded on either engine. Recording also occurs when a fire indication is detected on either engine or when a fire test is performed on an operating engine while airborne. The recording includes pre- and post-exceedance data points so that a detailed time-versus-parameter plot of the exceedance may be constructed. Certain CAS messages are associated with engine exceedance detection and, if the exceedance is not corrected, the subsequent recording of the exceedance. On SPZ-8000 equipped airplanes, a blue ENGINE EXCEEDANCE advisory message is displayed when an exceedance is detected. On SPZ-8000 equipped airplanes having ASC 415 and SPZ-8400 equipped airplanes, the blue ENGINE EXCEEDANCE advisory message has been removed and replaced with a red ENGINE EXCEEDANCE warning message. If the detected exceedance is not corrected, it is recorded and a blue EXCEEDANCE RECORD advisory message is displayed (SPZ-8000 equipped airplanes having ASC 415 and SPZ-8400 equipped airplanes). The exceedance can then be viewed on the EXCEEDANCES system page.

APU exceedance data is recorded when an EGT or RPM limit is exceeded, a fire indication is detected or when an APU fire test is performed while airborne. Like engine limit data recording, APU limit recording includes pre- and post-exceedance data points so that a detailed time-versus-parameter plot of the exceedance may be constructed. CAS messages are also associated with APU exceedance detection and, if the exceedance is not corrected, the subsequent recording of the exceedance. A blue APU EXCEEDANCE advisory message is displayed when an exceedance is detected. If the detected exceedance is not corrected, it is recorded and a blue EXCEEDANCE RECORD advisory message is displayed (SPZ-8000 equipped airplanes having ASC 415 and SPZ-8400 equipped airplanes). The exceedance can then be viewed on the EXCEEDANCES system page.

Brake temperature exceedance data is recorded when a brake temperature exceeds 625°C. On SPZ-8000 equipped airplanes having ASC 415 and SPZ-8400 equipped airplanes, a blue EXCEEDANCE

RECORD advisory message is displayed. The exceedance can then be viewed on the EXCEEDANCES system page.

The EXCEEDANCES system page display holds the most recent exceedance data until airplane power is turned off or another exceedance is detected. All exceedances are held in the fault warning computer's memory, however. If the EXCEEDANCES page is selected before any exceedances are recorded, a white NO EXCEEDANCES RECORDED message is displayed on the page.

Although engine trend and limit data recording operates automatically, a manual request for recording can also be made by the flight crew. On airplanes SN 1253 and subsequent and SN 1000 through 1252 having ASC 255, a crew activated recording switch (labeled SNAPSHOT, shown in Figure 13) allows the flight crew to record maximum values and the time in exceedance for up to five (5) minutes on the ground or while in flight.

The memory allocated within each fault warning computer for trend and limit recording is a nonvolatile type of memory known as Electrically Erasable and Programmable Read Only Memory (EEPROM). On SPZ-8000 equipped airplanes, 64 kilobytes of memory is allocated, with provisions for an additional 64 kilobytes of growth memory. On SPZ-8400 equipped airplanes, 128 kilobytes of memory is allocated. When the fault warning computer is tested, a message indicating EEPROM memory usage is generated.

On SPZ-8000 equipped airplanes having ASC 415 and SPZ-8400 equipped airplanes, a blue T&L >80% FULL advisory message is displayed on CAS when 80% of the allocated EEPROM memory has been used. The flight crew should then notify maintenance personnel to download and erase the fault warning computer memory at the next convenient maintenance period. The T&L >80% FULL advisory message is displayed only when the airplane is on the ground at speeds of less than 50 knots.

The fault warning computer contains a dedicated output for data downloading. Downloading is performed using the data loader.

3. Controls and Indications:

(See Figure 11 through Figure 13.)

A. Circuit Breakers (CBs):

Circuit Breaker Name:	CB Panel:	Location:	Power Source:
BUS CONT #1	CP	K-2	ESS DC Bus
BUS CONT #2	CP	L-2	ESS DC Bus **(1)**
BUS CONT #3	CP	M-2	ESS DC Bus **(2)**
FWC #1	CP	A-13	ESS DC Bus
FWC #2	CP	B-13	ESS DC Bus **(3)**
DAU #1A	CP	A-14	ESS DC Bus
DAU #2A	CP	B-14	ESS DC Bus **(4)**
DAU #1B	CP	C-14	ESS DC Bus **(3)**
DAU #2B	CP	D-14	ESS DC Bus
SPZ-8000 SHUT DN **(5) (6)**	CP	L-4	R MAIN DC Bus
TONE WARN #1	P	A-5	ESS DC Bus
TONE WARN #2	P	B-5	R MAIN DC Bus

NOTE(S):

(1) R MAIN DC bus on SPZ-8000 equipped airplanes.

(2) L MAIN DC bus on SPZ-8000 equipped airplanes.

(3) R MAIN DC bus on SPZ-8000 equipped airplanes.

(4) L MAIN DC bus on SPZ-8000 equipped airplanes.

(5) CB installed on airplanes SN 1156 and subs, and SN 1000-1155 with ASC 92A.

(6) CB labeled “SPZ-8400 SHUT DN” on SPZ-8400 equipped airplanes. CB labeled “SPZ-8000 SHUT DN” on SPZ-8000 equipped airplanes (when installed by ASC 92A).

B. Warning (Red) CAS Messages:

CAS Message:	Cause or Meaning:
DAU 1-2 MISCMP-MSG	Miscompare between data channels of a serious nature.
ENGINE EXCEEDANCE **(1)**	LP, HP or TGT above limits.

NOTE(S):

(1) SPZ-8000 equipped airplanes with ASC 415 and SPZ-8400 equipped airplanes.

C. Caution (Amber) CAS Messages:

CAS Message:	Cause or Meaning:
DAU 1-2 MISCMP ENG	Engine data miscompare between DAU ’A’ and ’B’ channels.
DAU 1-2 MISCMP MSG	EICAS amber message miscompare between DAU ’A’ and ’B’ channels.

D. Advisory (Blue) CAS Messages:

CAS Message:	Cause or Meaning:
APU EXCEEDANCE	Fault warning computer has recorded an exceedance.
BC 1-2-3 TEST FAIL	Bus controller power-up self test has failed.
BUS CTLR 1-2-3 FAIL	Indicated bus controller has failed.
DAU 1A-1B-2A-2B FAIL	Indicated DAU channel has failed.
DAU 1-2 MISCMP MSG	EICAS blue message miscompare between DAU ’A’ and ’B’ channel.
ENGINE EXCEEDANCE **(1)** EXCEEDANCE RECORD **(2)**	Fault warning computer has recorded an exceedance.
FWC 1-2 FAIL	Indicated fault warning computer has failed.
MAINT SWITCH ON	Maintenance switch is on.
T&L >80% FULL **(2)**	Fault warning computer memory is greater than 80% full.
TONE GEN 1-2 FAIL **(3)**	Aural warning tone generator has failed.

NOTE(S):

(1) Deleted by ASC 415 on SPZ-8000 equipped airplanes.

(2) SPZ-8000 equipped airplanes with ASC 415 and SPZ-8400 equipped airplanes.

(3) Presented as TONE GEN FAIL on SPZ-8000 equipped airplanes.

4. Limitations:

A. Flight Manual Limitations:

The are no Flight Manual limitations for the central warning system at the time of this revision.

B. System Notes:

(1) Bus Controllers:

The bus controller self-test will fail if power is momentarily removed from both fault warning computers after the bus controllers are powered. If this occurs, the system can be reset and the message cleared by reapplying power to the airplane in the normal power-up sequence or by pulling and resetting all three bus controller circuit breakers.

(2) Exceedance Recording:

It is possible that display of the blue APU EXCEEDANCE, ENGINE EXCEEDANCE or EXCEEDANCE RECORD advisory messages could be caused by a fire. The flight crew should be alert for other indications of fire and take appropriate action as necessary.

THIS PAGE IS INTENTIONALLY LEFT BLANK.

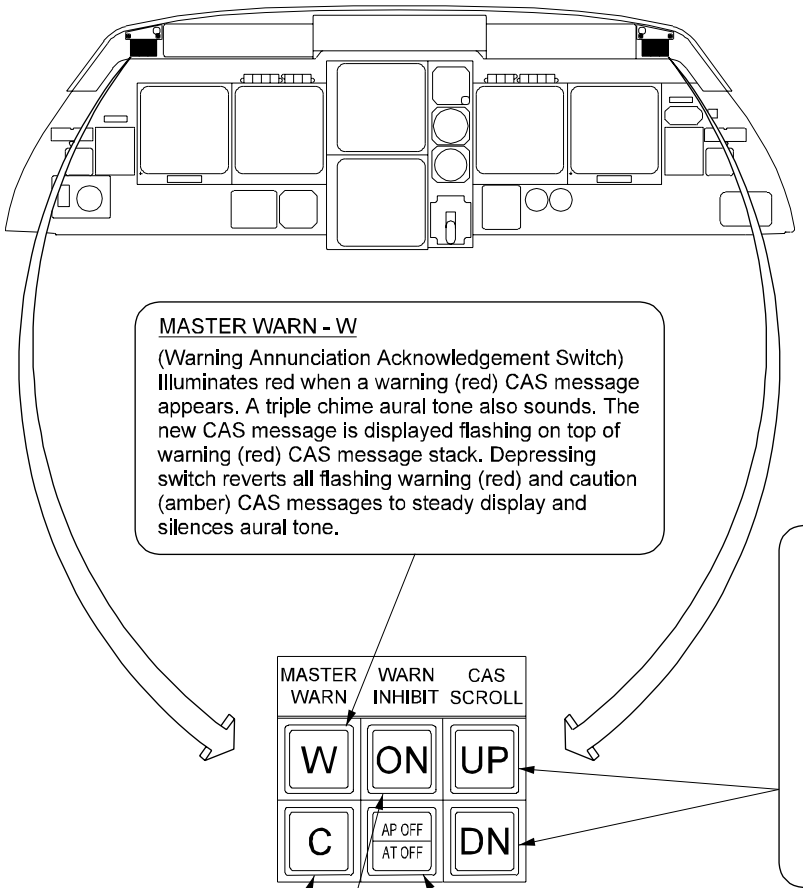

MASTER WARN - W

(Warning Annunciation Acknowledgement Switch) Illuminates red when a warning (red) CAS message appears. A triple chime aural tone also sounds. The new CAS message is displayed flashing on top of warning (red) CAS message stack. Depressing switch reverts all flashing warning (red) and caution (amber) CAS messages to steady display and silences aural tone.

UP / DN

- Used to scroll amber (caution) and blue (advisory) CAS messages up or down on the display unit.
- Criteria that must be met to use the scroll feature:
  - • Amber (caution) messages are acknowledged.
  - • Blue (advisory) messages displayed steady.
- When a new amber message is generated, all amber and blue messages will be returned to the CAS display (up to 23 messages).
- When a new blue message is generated, all blue messages will be returned to the CAS display (up to 23 messages).

MASTER WARN - C

(Caution Annunciation Acknowledgement Switch) Illuminates amber when a caution (amber) CAS message appears. A double chime aural tone also sounds. The new CAS message is displayed flashing on top of caution (amber) CAS message stack. Depressing switch reverts all flashing caution (amber) CAS messages to steady display and silences aural tone.

AP OFF / AT OFF

- AP annunciator amber light is illuminated for five seconds if an external sensor failure (or stick shaker activation) causes autopilot disconnect.
  - • If failure of FGC causes autopilot disconnect, annunciator remains illuminated until quick disconnect switch is pushed.
- AT annunciator amber light is illuminated for one second when the autothrottle is disconnected manually and flashes continuously for any automatic disconnect.
  - • Flashing annunciator can be canceled by engaging the autothrottle or pushing the A/T DISC switch on either power lever.

WARN INHIBIT - ON

When selected, legend illuminates amber and limited CAS message / tone inhibiting is enabled. Caution annunciator acknowledgement switch illumination and aural tones associated with caution and advisory CAS messages (double chime and single chime) are inhibited, except as noted in text.

26578C00

Warning/Caution Inhibition Panel
Figure 11

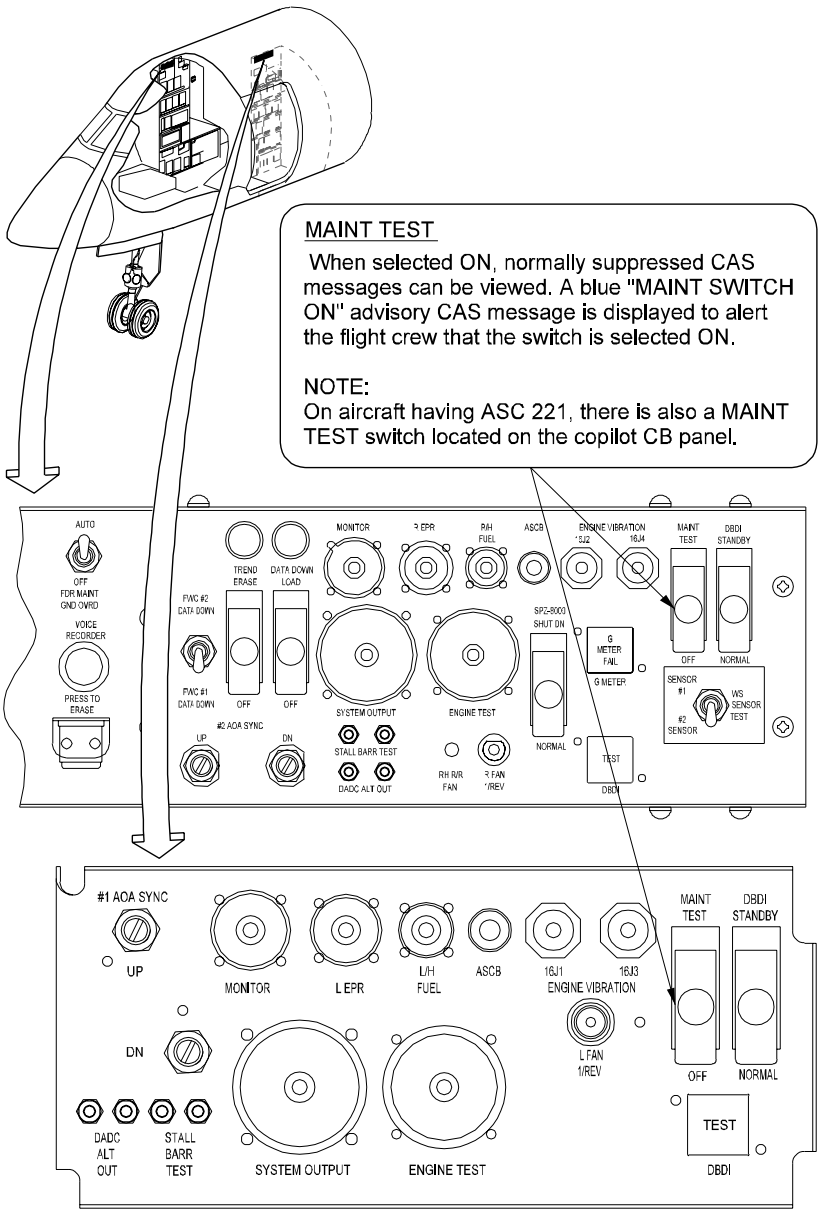

Maintenance Test Switch
Figure 12

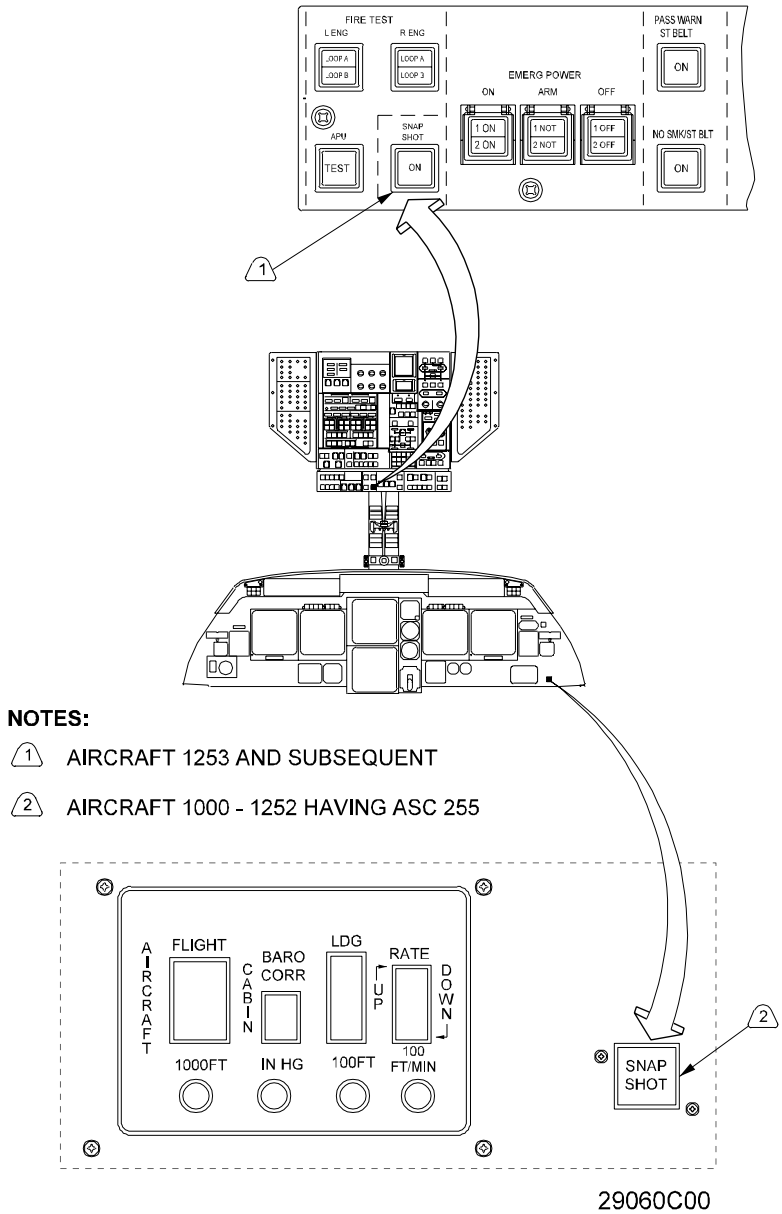

NOTES:

1. AIRCRAFT 1253 AND SUBSEQUENT
2. AIRCRAFT 1000 - 1252 HAVING ASC 255

Snapshot Switch
Figure 13

2A-31-50: Central Display System

1. **General Description:**

   The Gulfstream IV central display system provides the flight crew a means to observe visual displays of conditions in selected systems. To enhance system operation, six (6) Display Units (DUs) present integrated data including Primary Flight Display (PFD) data, Navigation Display (ND) data, Engine Instruments (EI) data and Crew Alerting System (CAS) data. PFD, ND and EICAS presentations can be further categorized as:

   - Pitch and roll attitude
   - Heading data
   - Course orientation
   - Flight director commands
   - Flight path angle
   - Weather presentations
   - Mode and source annunciations
   - Air data parameters
   - Engine data
   - Fault warning information
   - Traffic Alert and Collision Avoidance System (TCAS) (optional)
   - Enhanced Ground Proximity Warning System (EPWS) (optional)

   The central display system is one of the many systems integrated into Honeywell's SPZ-8000 (or SPZ-8400) Digital Automatic Flight Control System and as such cannot be adequately described in the space available here. For comprehensive reference material on the central display system, refer to Honeywell's SPZ-8000 (or SPZ-8400) Digital Automatic Flight Control System Pilot's Manual for the Gulfstream IV. For the purposes of this system description, the following central display system units and components will be discussed:

   - Symbol Generators
   - Display Controllers
   - Display Units
   - Display Power Panel
   - Display Unit Cooling
   - Display Brightness Panel
   - Display Switching and System Control Panel
   - Electronic Checklist

2. **Description of Subsystems, Units and Components:**

   A. **Symbol Generators:**

   The three Symbol Generators (SGs) are the principal components of the central display system. Using ASCB, ARINC (Aeronautical Radio Incorporated) 429 and/or ARINC 453 data buses, the symbol generators interface with the other central display system components, flight management system, flight guidance system and navigation system to process, organize and display data in the desired format on the selected display unit. Each symbol generator has an incorporated bus controller

available to govern ASCB as required.

The symbol generators normally drive the display units as shown in the following table:

DU #:	Panel Position:	Used As:	Normally Driven By:
1	Far Left	Pilot's PFD	SG #1
2	Second From Left	Pilot's ND	SG #1
3	Upper Center	EI Display	SG #3
4	Lower Center	CAS Display	SG #3
5	Second From Right	Copilot's ND	SG #2
6	Far Right	Copilot's PFD	SG #2

Each symbol generator is powered up when the display units it normally serves is powered up. If one symbol generator should later fail, the remaining two operating symbol generators will continue providing the same displays with no degradation. This prevents a single symbol generator failure from rendering the central display system inoperative. If two symbol generators fail, the remaining operating symbol generator will drive all six DUs simultaneously, however, only four distinct display formats can be provided. In this case, the copilot's displays will be a repeat of the pilot's displays. In addition, the pilot's display controller will control central display system functions. If the pilot's display controller should fail at this stage, control would shift to the copilot's display controller.

B. Display Controllers:

Shown in Figure 17, the two (2) display controllers are used to control the central display system. The pilot's display controller is installed in the left side of the flight panel glareshield; the copilot's display controller is installed in the right side. Each display controller contains twenty pushbuttons, three knobs and a Cathode Ray Tube (CRT) screen. The twenty pushbuttons (ten function keys and ten line select keys) allow navigation data and sensor source selection, EFIS and EICAS format selection, bug setting, test functions and maintenance functions. The three knobs allow adjustment of menu parameters (SET), barometric pressure setting (BARO) and CRT screen brightness (BRT).

Each BARO knob is connected directly to the on-side Digital Air Data Computer (DADC): DADC #1 for the pilot's side, DADC #2 for the copilot's side. When the BARO knob has been turned past its barometric pressure setting limit, the altitude scale on the PFD will show a red X. Rotating the knob back to within its limit will remove the red X and return the scale to normal.

In addition to setting the local altimeter setting for the displayed air data source, the BARO knob also has a "Push-To-Standard" feature incorporated. By depressing the PUSH STD portion of the knob, the flight crew can select and display the numeric value of standard day barometric pressure (29.92 in Hg or 1013 Mb) or an iconic representation of this value, "STD".

If a display controller fails, the associated PFD and ND revert to the following display source selections:

PFD:	ND:
On-side IRS, DADC, RA & NAV	MAP Format
RAD ALT Set = 200	On-side FMS
Bearing Pointers = AUTO	ID WAYPT
BARO = IN	
FD CMD = SC	

If both display controllers fail, EICAS uses DAU 1A, DAU 2B and FWC 1. Operation of the BARO knobs will be unaffected due to the direct connection to their on-side DADC.

C. Display Units:

The six display units (Figure 17) are interchangeable, high resolution, eight inch by eight inch cathode ray tubes. Driven by the symbol generators and commanded by the display controllers, the display units are used by the central display system to present air data and display information about the airplane's attitude, flight director, navigation, engines and aircraft systems. Once power is applied, it takes approximately ten (10) minutes for full color stabilization to take place.

Display units used as primary flight displays also present other data vital for safe airplane operation such as the navigation data source, radio altitude, course, heading and distance.

Display units used as navigation displays show navigation and flight plan data from the navigation receivers, flight management system, and weather radar in one of three desired formats:

- MAP: partial compass rose and range displays
- COMP: (compass) traditional HSI with 360° compass rose
- PLAN: "north up" representation of active flight plan

If the component providing data to the PFD or ND fails or provides invalid data, a red X will appear on that portion of the PFD or ND. If a symbol generator fails, a red X will appear across the entire display unit. If the display unit goes blank, display unit failure should be suspected.

D. Display Power Panel:

The six display units are selected on and off in pairs using the PILOT, EICAS and COPILOT switches on the display power panel (DISPLAYS section of the cockpit overhead panel, Figure 14). All three switches are guarded switches and when not selected on, an amber OFF legend is displayed in the switch. Design of the panel is "fail-operational" in that the affected display units will be powered should a failure occur within the panel.

E. Display Unit Cooling:

Two fans are installed to provide circulation of cooling air to the display units. On airplanes Serial Number (SN) 1000 through 1155 not having Aircraft Service Change (ASC) 87, the cooling fans automatically start and remain on any time electrical power is applied to the airplane, regardless of whether the display units are on or off. The fans may be shut off, however, by pulling the DISPLAYS FAN #1 and DISPLAYS FAN #2 circuit breakers (copilot's circuit breaker panel, D-5 and D-6, respectively).

On airplanes SN 1156 and subsequent and SN 1000 through 1155 having

ASC 87, the display unit cooling fans (and also the display controllers) are shut off when the airplane is on the ground and all three DISPLAYS switches are selected OFF. When the airplane is airborne, the cooling fans and display controllers are operational at all times. In addition to being able to control the cooling fans without exercising the circuit breakers, incorporation of ASC 87 eliminates the possibility of inadvertently operating the display units without the cooling fans operating.

F. Display Brightness Panel:

DU brightness is controlled by the DISPLAY BRIGHTNESS panel located on the cockpit center pedestal and shown in Figure 15. Three (3) dual concentric potentiometers (knob sets consisting of an inner and outer knob) are provided. Each knob set is dedicated to a pair of DUs: pilot's, EICAS and copilot's. The inner and outer knobs control the DUs in the pair.

Display brightness is also controlled by a photo-electric sensor in each DU that will automatically adjust display brightness based on ambient light levels.

G. Display Switching and System Control Panel:

(See Figure 18 for SPZ-8000 and Figure 19 for SPZ-8400.)

The display switching and system control panel is located on the cockpit overhead panel. It provides the flight crew with reversionary control of the central display system in the event of display unit or symbol generator failures. The control panel is divided into two sections, labeled DISPLAY SWITCHING and SYMBOL GENERATOR CONTROL. The function of each section is outlined as follows:

(1) DISPLAY SWITCHING **for SPZ-8000 equipped airplanes** is accomplished by three (3) selector knobs: PILOT, EICAS and COPILOT.

If either PFD fails, selecting PFD XFER with the associated DISPLAY SWITCHING knob moves the PFD display to the ND. If an ND fails, ND OFF is selected.

If either the Engine Instruments (EI) display or the Crew Alerting System (CAS) display fails, the remaining operating display can provide a compacted presentation of both displays. Selection of the EICAS DISPLAY SWITCHING knob to TOP CMPT presents all information on the EI display; selection to BOT CMPT presents all information on the CAS display.

(2) DISPLAY SWITCHING **for SPZ-8400 equipped airplanes** is accomplished automatically by the central warning system in the following manner:

- Failure of either PFD switches that PFD to the associated ND
- Failure of either ND shuts off that ND
- Failure of the EI display causes all of EICAS to be displayed compacted on the CAS display
- Failure of the CAS display causes all of EICAS to be displayed compacted on the EI display

Manual switching provisions are incorporated to override the automatic switching feature through the use of two (2) selector knobs: PILOT and COPILOT. Manual switching is also required to

restore normal operation after automatic switching has taken place. Note that manual switching only affects DU 2 and DU 5. The available manual selections are described as follows.

(a) PILOT Selector:

- NORM - normal presentation
- PFD - displays PFD information on DU 2
- ENG / EICAS - with DU 3 failed, EI data is displayed on DU 2

(b) COPILOT Selector:

- NORM - normal presentation
- PFD - display of PFD information on DU 5
- CAS / EICAS - with DU 4 inoperative, normal CAS data is displayed on DU 5

(3) SYMBOL GENERATOR CONTROL **for both SPZ-8000 and SPZ-8400 equipped airplanes** provides three (3) selectors: PILOT, EICAS and COPILOT. Each selector provides reversionary control of its associated SG, as shown in Figure 18 and Figure 19 and summarized in the following table:

DISPLAY SYSTEM CONTROL Selector and Position:			**Display System and Symbol Generator Used:**		
PILOT	**EICAS**	**COPILOT**	**Pilot's**	**EICAS**	**Copilot**
NORM	NORM	NORM	1	3	2
ALT	NORM	NORM	3	3	2
ALT	ALT	NORM	2	2	2D
ALT	ALT	ALT	1	3	2
ALT	NORM	ALT	3	3	3D
NORM	NORM	ALT	1	3	3
NORM	ALT	NORM	1	2	2
NORM	ALT	ALT	1	1	1D

NOTE(S):

NORM = Normal

ALT = Alternate

D = Duplicate of source data in use by pilot's display system

H. Electronic Checklist:

Electronic checklist modules are installed in the fault warning computers of all SPZ-8400 equipped airplanes, in SPZ-8000 equipped airplanes SN 1144 and subsequent, and in SPZ-8000 equipped airplanes SN 1000 through 1143 having ASC 178 incorporated. The checklist is controlled with either the ND joystick and associated switches (Figure 16) or the display controller.

The electronic checklist can be displayed with the ND in the MAP, COMP or PLAN mode. When displayed, it appears in the lower center portion of the ND. The electronic checklist has the following features:

- 12 lines of text per checklist page (maximum)

- Display for NORMAL, ABNORMAL and EMERGENCY procedures (EMERGENCY procedures normally displayed on copilot's ND only)
- Automatic display (auto-callup) of EMERGENCY procedures (normally displayed on copilot's ND only)

When selected by the display controller, the electronic checklist is displayed on the on-side ND. A typical checklist is composed of data generated by the selected fault warning computer and contains the following:

- Label (NORMAL/ABNORMAL/EMERGENCY)
- Cursor
- Procedure title
- Procedure page index
- Procedure step description

The electronic checklist can be selected by only one display controller at a time. Once selected by one display controller, the checklist is displayed on the on-side ND and the ability to select the checklist for display is removed from the cross-side display controller.

The title page of the electronic checklist (labeled TITLE PAGE) is the first item displayed in the NORMAL index. The TITLE PAGE must be reviewed by the flight crew before any other selection on the NORMAL, ABNORMAL or EMERGENCY index can be made. For the emergency procedures permitted to auto-callup, reviewing the TITLE PAGE is not required, however. For through flights, reselecting the TITLE PAGE resets all NORMAL checklists, making them once again available for use.

The five (5) auto-callup checklists are:

- ENGINE FIRE
- ENGINE OVERHEAT
- APU FIRE
- LOSS OF PRESSURIZATION
- THRUST REVERSER UNLOCK

The ENGINE FIRE checklist has priority over all other checklists. Regardless of the checklist in progress, the ENGINE FIRE checklist will be displayed when engine fire warnings are triggered. When all line items in the ENGINE FIRE checklist have been acknowledged by the flight crew, the previous checklist in progress will be displayed. If any one of the other four auto-callup checklists is in progress when a second auto-callup checklist of equal priority is activated, the second checklist will wait in queue. When all line items in the first checklist have been acknowledged by the flight crew, the second checklist will be displayed.

If an engine or APU fire test is accomplished while the BEFORE STARTING ENGINES checklist is displayed, the auto-callup feature will cause the ENGINE FIRE or APU FIRE checklist to be displayed.

If the selected fault warning computer should fail while a checklist is displayed, a red CHECKLIST UNAVAILABLE message is displayed in the checklist window below the title page.

3. **Controls and Indications:**

(See Figure 16 and Figure 17.)

A. **Circuit Breakers (CBs):**

Circuit Breaker Name:	CB Panel:	Location:	Power Source:
DISPLAY CONT #1	CP	F-5	ESS DC Bus **(1)**
DISPLAY CONT #2	CP	G-5	R MAIN DC Bus
DISPLAY UNIT #1	CP	E-6	ESS DC Bus
DISPLAY UNIT #2	CP	F-6	R MAIN DC Bus
DISPLAY UNIT #3	CP	G-6	ESS DC Bus
DISPLAY UNIT #4	CP	H-6	R MAIN DC Bus
DISPLAY UNIT #5	CP	I-6	L MAIN DC Bus
DISPLAY UNIT #6	CP	J-6	R MAIN DC Bus
DISPLAYS FAN #1	CP	D-5	ESS DC Bus **(2)**
DISPLAYS FAN #2	CP	D-6	R MAIN DC Bus **(3)**
SYM GEN #1	CP	K-3	ESS DC Bus
SYM GEN #2	CP	L-3	R MAIN DC Bus
SYM GEN #3	CP	M-3	L MAIN DC Bus

NOTE(S):

(1) L MAIN DC bus on SPZ-8000 equipped airplanes.

(2) ESS AC bus ϕA on SN 1000 & SN 1002-1095 (excluding 1034) not having ASC 49.

(3) R MAIN AC bus on SN 1000 & SN 1002-1095 (excluding 1034) not having ASC 49.

B. **Warning (Red) CAS Messages:**

CAS Message:	Cause or Meaning:
CHECK PFD 1-2 **(1)**	Hazardously misleading information on both PFDs.

NOTE(S):

(1) Presented as CHECK PFD on SPZ-8000 equipped airplanes.

C. **Caution (Amber) CAS Messages:**

CAS Message:	Cause or Meaning:
CHECK DU 1-2-3-4-5-6	Information on indicated display unit may be incorrect.
DU FAN 1-2 FAIL	Respective display unit cooling fan has failed.

D. **Advisory (Blue) CAS Messages:**

CAS Message:	Cause or Meaning:
CHECKLIST MISMATCH	Different checklists installed in FWC 1 and FWC 2.
DC CONFIG MISMATCH **(1)**	Disagreement between the 2 display controllers' configuration.
DISP CTLR 1-2 FAIL	A display controller has failed.
DU 1-2-3-4-5-6 HOT	DU hot (266° F [130° C]).
PROG MSG 1-2 FAIL **(1)**	Programmable message modules have failed.

CAS Message:	Cause or Meaning:
PROG MSG 1-2 MISMATCH **(1)**	Programmable message modules do not contain the same messages.
SG 1-2-3 FAIL	Indicated symbol generator has failed.
SG 1-2-3 HOT	Indicated symbol generator is hot.

NOTE(S):

(1) SPZ-8400 equipped airplanes.

4. Limitations:

A. Flight Manual Limitations:

(1) Electronic Checklist:

(a) **For SPZ-8000 equipped airplanes:** electronic checklist document number 1159AV41201-20 corresponds to this revision of the Gulfstream Aerospace GIV Airplane Flight Manual and Gulfstream Aerospace GIV Operating Manual.

(b) **For SPZ-8400 equipped airplanes:** electronic checklist document number 1159AV41202-20 corresponds to this revision of the Gulfstream Aerospace GIV Airplane Flight Manual and Gulfstream Aerospace GIV Operating Manual.

(c) **Acceptable checklists:** electronic checklist document numbers 1159AV41201-8 and 1159AV41202-10 are acceptable for use until the checklist modules can be updated.

(d) **Verifying checklist version:** checklist version can be verified by selecting TITLE PAGE of electronic checklist.

B. System Notes:

(1) Display Units:

To extend the service life of the display units, it is recommended that:

- conditions of extreme heat or cold be corrected before turning on the display units
- the display units should be selected OFF when not needed
- the display unit fans be selected OFF when display units are selected OFF
- all six display units are turned on whenever the EICAS display units are needed

(2) Electronic Checklist:

Any change to the airplane that results in the electronic checklist being incompatible with the required flight crew procedure to the extent that the electronic checklist could be considered hazardously misleading will require the electronic checklist to be either revised or disabled entirely.

DISPLAYS
When selected OFF, Display Unit (DU) operation is inhibited and amber OFF legend in switch is illuminated. On SN 1156 and subs and SN 1000-1155 having ASC 87, the DU cooling fans are shut off when the airplane is on the ground and all three switches are selected OFF. When selected ON, amber off legend in switch is extinguished; DUs are powered up in pairs as follows:

- PILOT: DUs 1 and 2
- EICAS: DUs 3 and 4
- COPILOT: DUs 5 and 6

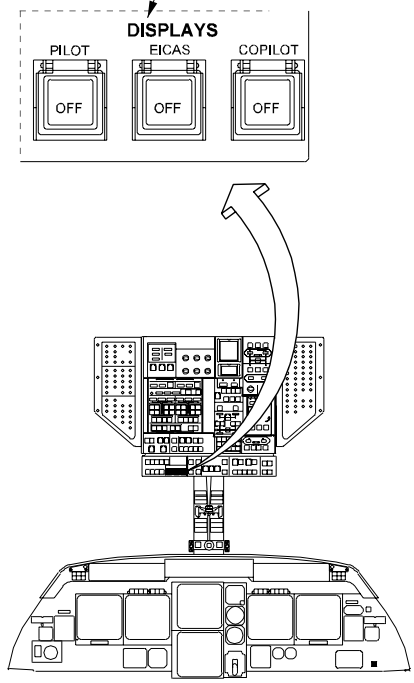

29062C00

Display Power Panel
Figure 14

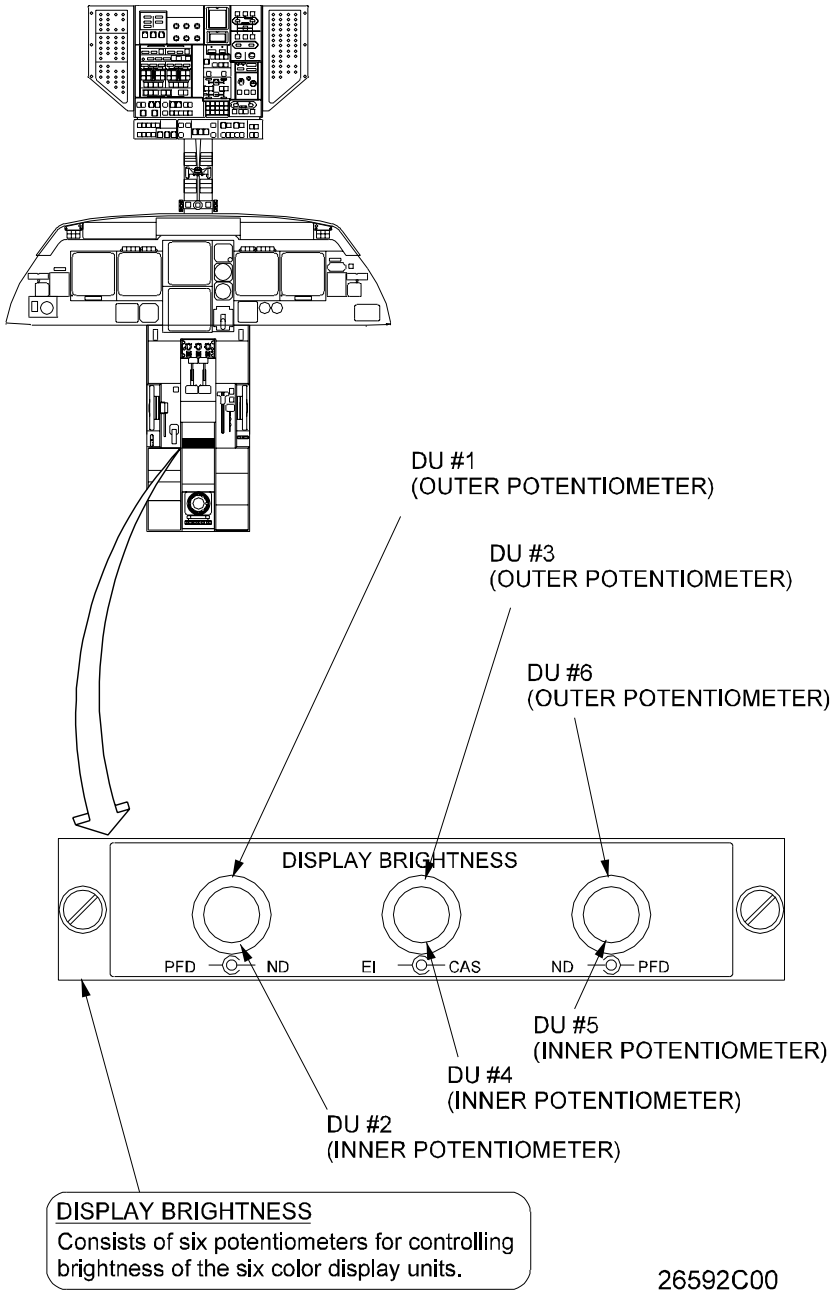

Display Brightness Panel
Figure 15

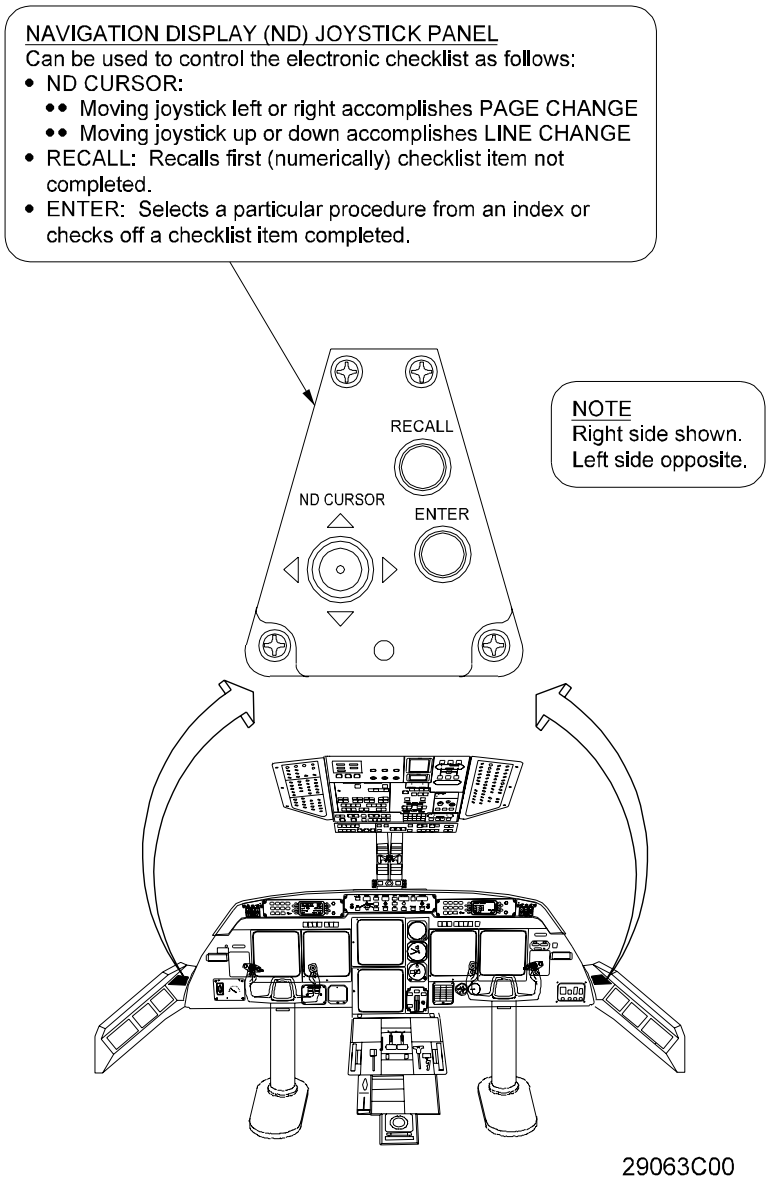

Navigation Display Joystick Panel
Figure 16

THIS PAGE IS INTENTIONALLY LEFT BLANK.

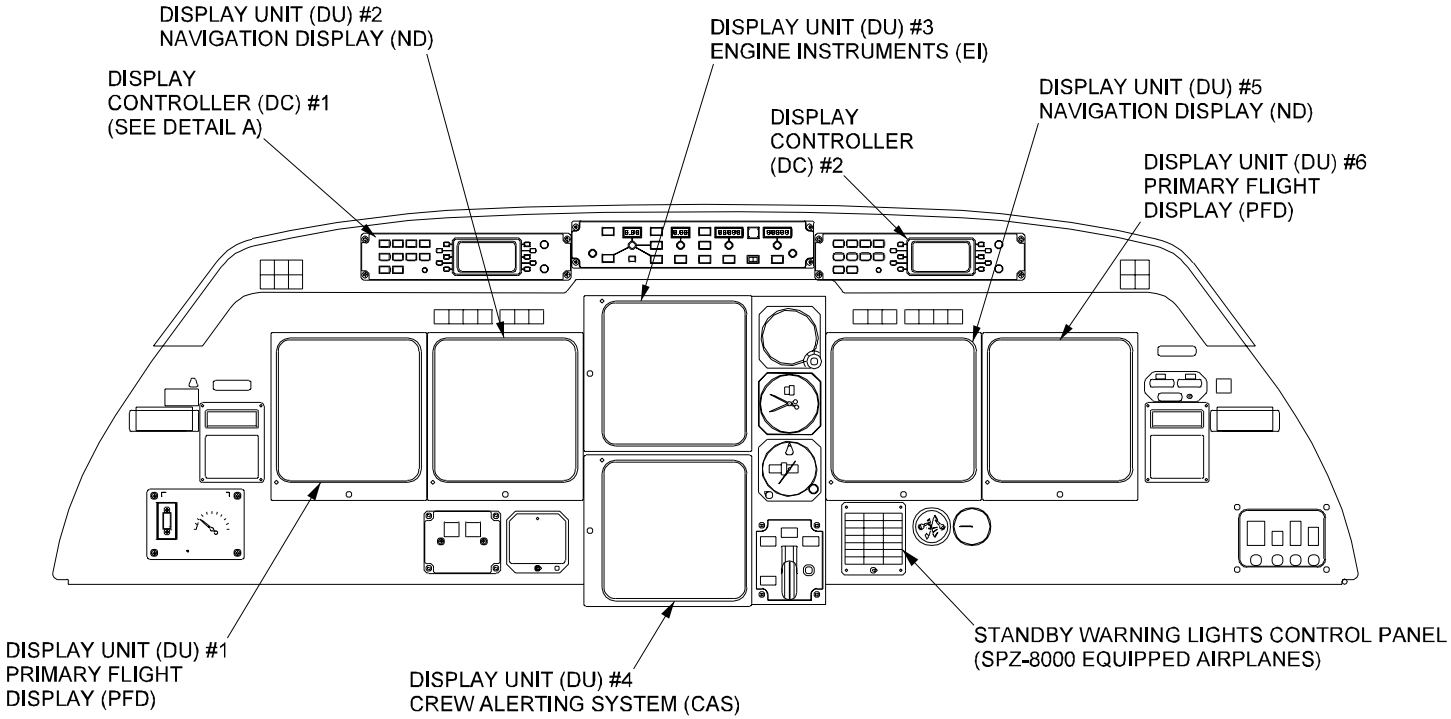

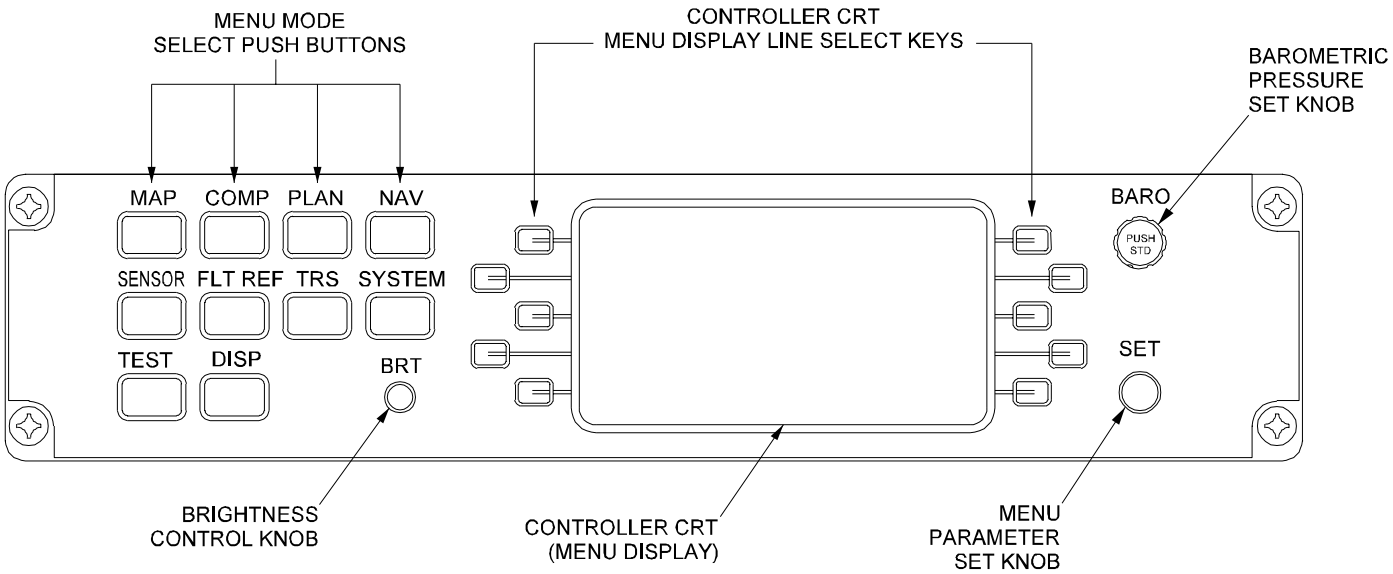

DETAIL A

29061C00

Display Units and Display Controllers
Figure 17

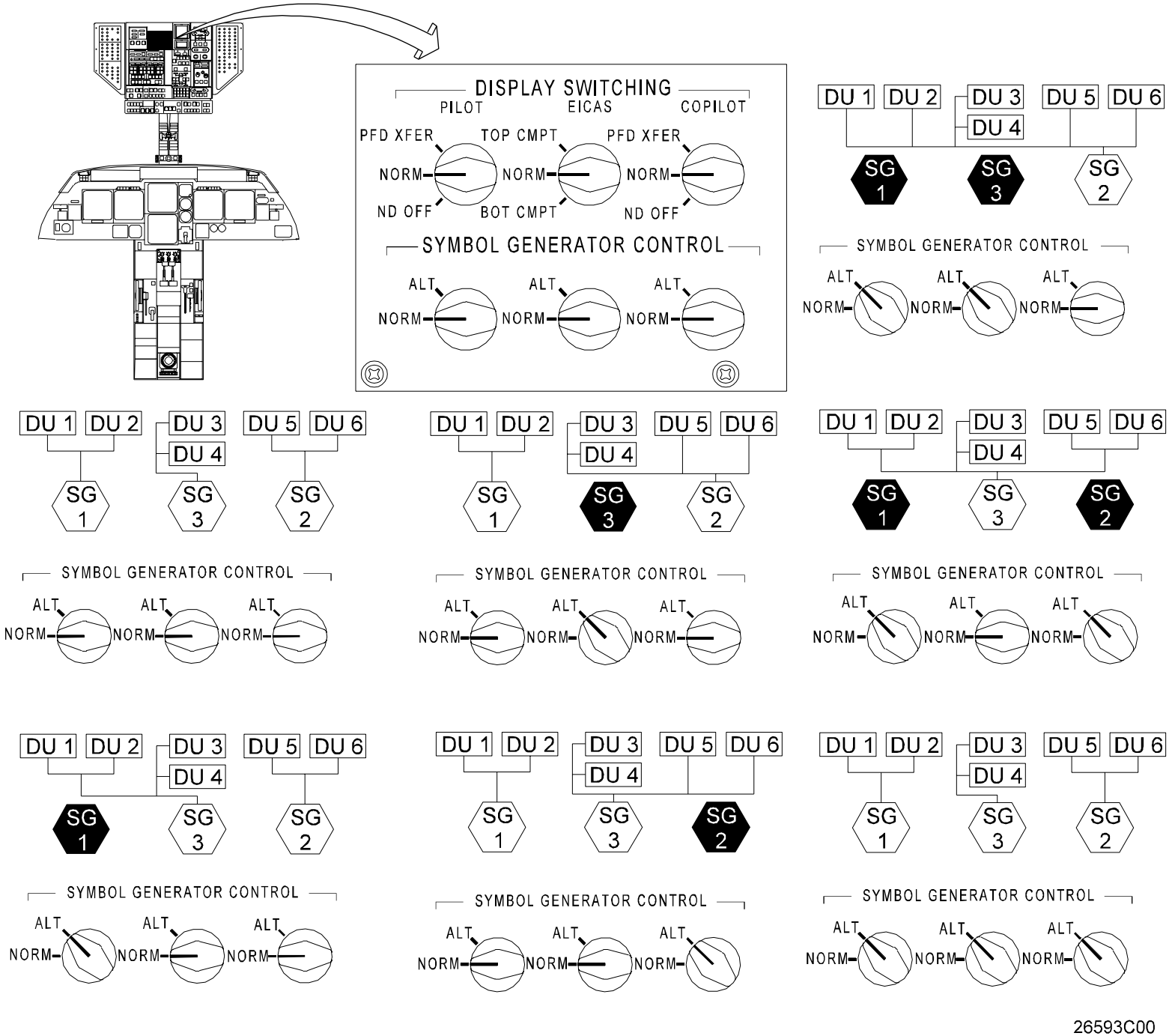

SPZ-8000 Display Switching and Display System Control Panel
Figure 18

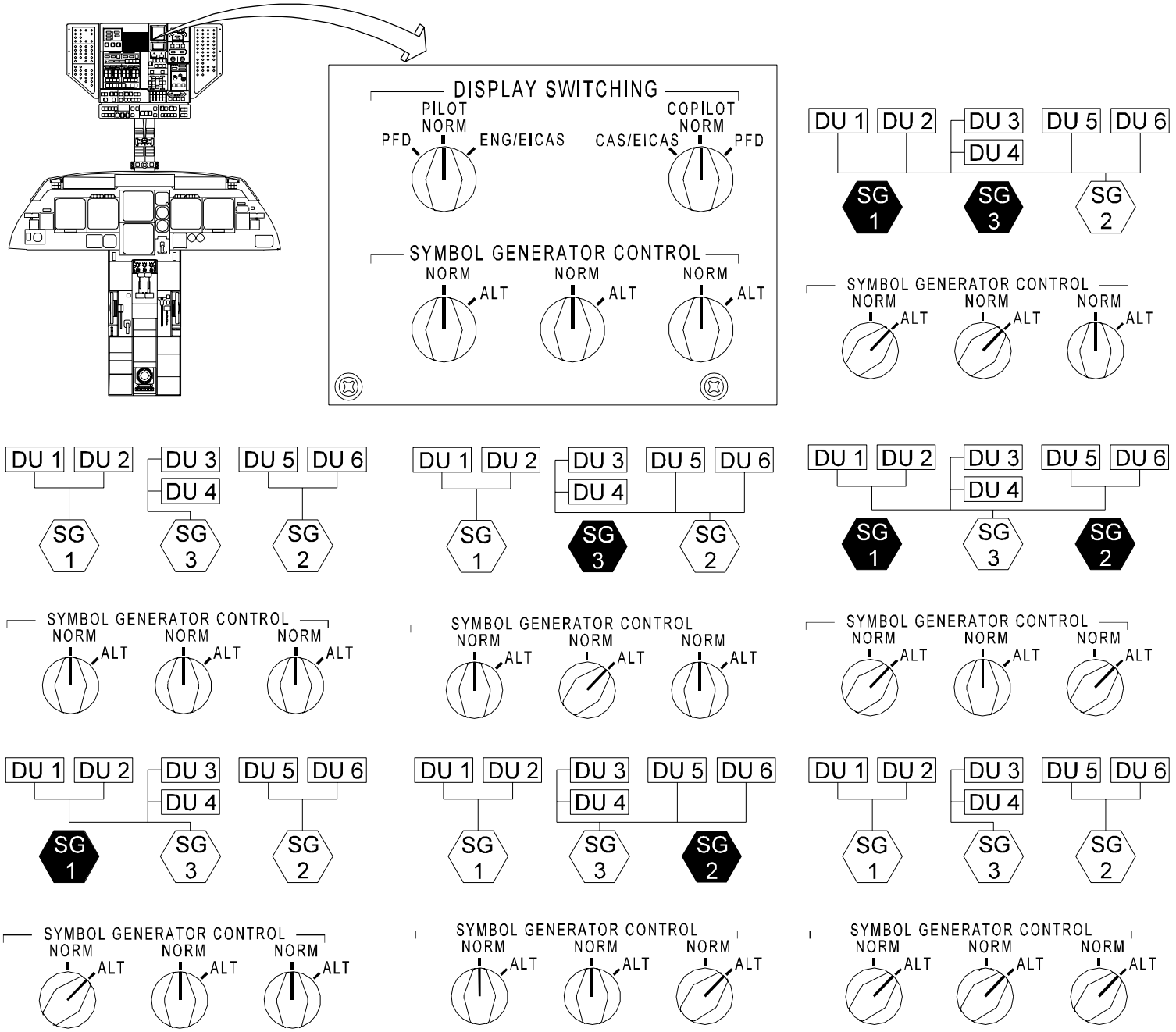

26594C00

SPZ-8400 Display Switching and Display System Control Panel
Figure 19

2A-32-10: General Description

The Gulfstream IV landing gear has dual wheels on both the main and steerable nose gear. The main gear retract laterally into wheel wells on either side of the fuselage keel at the wing root area. The auto-centered nose gear retracts forward into a wheel well beneath the cockpit. Integrated gear doors close upon completion of gear extension and retraction providing an aerodynamically conformal fuselage surface.

Landing gear operation normally uses 3000 psi pressure from the Combined hydraulic system. Extension and retraction selections are made with the cockpit landing gear handle that is mechanically linked to the landing gear selector valve. The selector valve directs hydraulic pressure in a defined sequence to open the gear doors, extend or retract the gear and close the doors when the gear have reached the selected position. If Combined hydraulic system pressure is not available, the Utility system pressure may be used for landing gear operation, provided adequate fluid remains in the Combined system. In the event that Combined system fluid is lost, a single-use emergency gear extension system operated with a 3000 psi nitrogen gas bottle will extend the landing gear, but leave the gear doors open. The landing gear operating system is shown in Figure 1.

Landing gear position is indicated on the gear control panel by a green light for each gear and a red light in the landing gear control handle. Illumination of the red landing gear handle light indicates a disagreement between the selected and actual position of one or more of the landing gear. The individual gear green lights come on when the corresponding landing gear is down and locked.

In addition to the red landing gear position disagreement light in the gear handle, a warning horn/klaxon will sound if the landing gear is not down and locked and the aircraft configuration, altitude and/or power setting approximates the landing configuration.

A proximity, or nutcracker switch is installed on each gear. As the weight of the aircraft compresses the shock struts of the landing gear, the nutcracker switches close completing circuits for relays to aircraft systems that only operate on the ground. Conversely, when airborne, the nutcraker switches open, providing an in-the-air signal to systems that operate only in flight.

Main landing gear brakes are air-cooled multiple carbon-fiber discs with anti-skid protection. Overheat protection for the tires/wheels is provided by fusible plugs in the wheels that melt, releasing tire pressure, if high temperature thresholds are exceeded. Brake temperatures are monitored (on aircraft S/Ns 1000 to 1155 with ASC 167 and S/N 1156 and subsequent) and indicated on cockpit displays.

The Combined hydraulic system provides 3000 psi for normal brake operation. Hydraulic fuses are incorporated into the brake hydraulic lines and close to prevent fluid loss if a hydraulic line is damaged or cracked. If Combined/Utility system pressure is not available, but brake system hydraulic lines are intact, the Auxiliary hydraulic system can be used for brake operation. If no hydraulic pressure is available from aircraft systems, accumulator pressure from the Parking/Emergency brake system will provide approximately five to six brake applications without anti-skid protection.

Control of the brake system is either through a hydro-mechanical analog brake system (HMAB) for aircraft S/Ns 1000 - 1213 with ASC 307 and S/Ns 1214 and subsequent, or a brake-by-wire system for aircraft S/Ns 1000 - 1213 without ASC 307. In the analog system, cockpit brake pedal application is mechanically linked to the system brake metering valves that apply hydraulic pressure proportional to pedal depression. In the