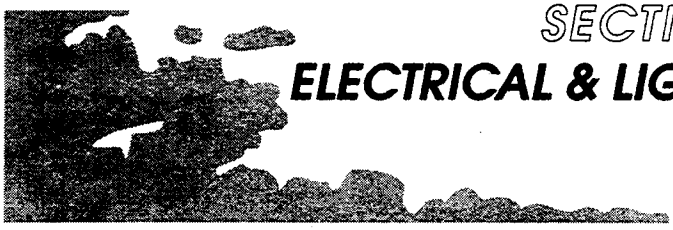

SECTION IV
ELECTRICAL & LIGHTING

TABLE OF CONTENTS

TABLE OF CONTENTS (Cont)

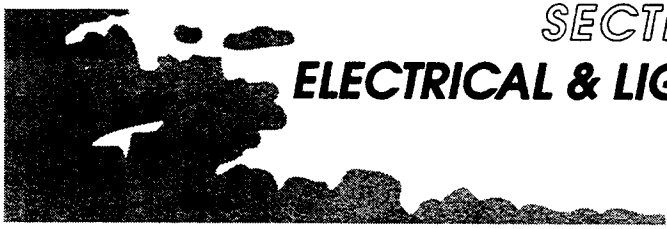

SECTION IV
ELECTRICAL & LIGHTING

DC POWER DISTRIBUTION

Primary electrical power for aircraft and avionics systems requiring DC power is supplied by two engine-driven, 30-volt, 400-ampere starter/generators. Secondary DC electrical power is supplied by two 24-volt lead-acid (standard) or nickel-cadmium (optional) batteries. An external power receptacle is installed for engine start and stationary ground operations.

A generator control unit (GCU) is installed for each generator. The GCU's contain circuits to maintain generator output at approximately 28 VDC throughout varying engine speeds and loads. The GCU's also contain circuits to equalize generator load during parallel operation, provide overvoltage protection, and provide current limiting during ground operations and during generator-assisted cross starts.

During normal operation, the generators supply all aircraft DC power requirements. Regulated 28 VDC output from the generators is applied to the respective generator buses. The voltage on the generator buses is applied to the battery charging bus through 275-amp current limiters. Battery charge is maintained from the battery charging bus through the battery relays and battery buses. The DC BUS 2 and 3 buses in the circuit breaker panels are powered from the respective generator buses through 50-amp current limiters. The battery bus in the pilot's circuit breaker panel is powered from the LH (#1) battery through a 20-amp current limiter. The battery bus in the copilot's circuit breaker panel is powered from the RH (#2) battery through a 5-amp current limiter. The DC BUS 1 buses in the circuit breaker panels are powered from the respective generator bus through an overload sensor and a control relay. On some aircraft the CABIN PWR BUS is installed in the overhead panel between the two crew members. On other aircraft the CABIN PWR BUS is installed on the bulkhead behind the pilot. The CABIN PWR BUS is powered from the battery charging bus through a 50-amp current limiter and a remote control circuit breaker. The inverters are powered through overload sensors and control relays. Additionally, aircraft systems producing heavy loads; such as resistance heaters, large

lamps, blowers, heavy-duty motors, and heavy-duty pumps, are supplied power through current limiters connected to either the battery charging bus or generator buses.

Overload sensors are installed between the DC BUS 1 buses and the associated generator bus. The overload sensors are installed to protect the DC BUS 1 feeder circuits from an overload. Basically, each overload sensor is a 70-amp circuit breaker mechanically connected to a switch. Should an overload condition occur, the circuit breaker will reposition the switch to deenergize a power relay, thereby disconnecting the DC BUS 1 bus. Additionally, the switch will apply a ground to trip the affected L or R DC BUS 1 circuit breaker. When the overload sensor circuit breaker cools, the switch will reset; however, the power relay will not reenergize due to the open L or R DC BUS 1 circuit breaker. When the malfunction has been corrected and the affected L or R DC BUS 1 circuit breaker reset, the power relay will reenergize and power to the DC BUS 1 bus will be restored.

The generators will not come on-line if an operating ground power unit is connected to the aircraft.

A cross start relay box is installed which enables an operating generator to assist in providing power to start the opposite engine. If one generator is on-line and a start of the opposite engine is initiated, the cross start relay circuits will cause both left and right starter relays to close. In effect, this will bypass both battery charging bus 275-amp current limiters and the output of the operating generator will supplement the aircraft batteries in providing power for the starter.

An airstart relay box is installed which prevents the EFIS and air data displays from blanking during airstarts. During an airstart, the RH (#2) battery is isolated from the battery charging bus and its power is utilized to keep the EFIS and air data systems powered at full voltage. When the aircraft is on the ground, operation of the airstart circuits is inhibited and both batteries will be available to power the starter.

An emergency bus system is installed to simplify load shedding in the event of a dual generator failure or cockpit/cabin smoke and/or fumes. When the emergency buses are selected, the battery charging bus is isolated from the batteries and the equipment connected to the emergency buses will be powered from the aircraft's batteries.

BATTERY SWITCHES

The aircraft batteries are controlled through the BATTERY 1 and 2 switches on the pilot's switch panel. The LH (#1) battery is wired directly to the battery bus in the pilot's circuit breaker panel and the RH (#2) battery is wired directly to the battery bus in the copilot's circuit breaker panel. When either BATTERY switch is placed in the On position, the corresponding battery relay closes to connect the respective battery bus to the battery charging bus if the EMER BUS switch is in the NORMAL position. When the BATTERY switch is placed in the OFF position, the battery relay is deenergized and the respective battery bus is isolated from the battery charging bus. The battery relays will also be deenergized whenever the EMER BUS switch is in the EMER position.

START-GEN SWITCHES

The starter/generators are controlled through the START-L GEN and START-R GEN switches on the pilot's switch panel. Each switch has three positions: START, OFF, and GEN. Prior to starting an engine, the following switches should be placed in the On position: BATTERY 1, BATTERY 2, applicable FUEL CMPTR, and applicable INVERTER. The BATTERY switches will supply power to the L and R IGN & START circuit breakers for starter and ignition system operation. The digital electronic engine control (fuel computer) will supply fuel scheduling for the start. The inverter is required to supply AC power for the OIL PRESS indicating system.

START position: With the thrust lever at CUTOFF and the BATTERY switches On, DC power from the L and R IGN & START circuit breakers is applied to the left and right START-GEN switches. When a START-GEN switch is set to START, DC power from the corresponding IGN & START circuit breaker is applied to close the corresponding starter relay, activate the corresponding standby pump, and shutdown the cooling and auxiliary heating (if installed) systems. When the starter relay closes, the starter will begin to spool the engine and the START light will illuminate. When the corresponding thrust lever is moved from CUTOFF to IDLE, switches in the throttle quadrant will close and activate the ignition system. When Turbine Speed (N_2) reaches approximately 45%, a speed sensor in the starter/generator will cause power to be removed from the starter relay (starter will be deenergized and the START light will extinguish) and discontinue ignition (IGNITION light will extinguish).

GEN position: During the engine start sequence, when engine RPM reaches idle speed, the START-GEN switch should be set to GEN. When GEN is selected, the corresponding standby pump will shut down, and the corresponding generation circuits will be activated. The generator will not come on line with a GPU connected. Additionally, the cooling and auxiliary heating (if installed) systems, and stabilizer heat system cutout relays will be reset. The generation circuits activate and control the corresponding generator through the generator control unit.

START LIGHTS

Amber lights adjacent to each START-GEN switch are installed to indicate starter operation. The corresponding light will be illuminated whenever the associated starter is energized.

GEN RESET BUTTONS

The GEN RESET buttons are located on the pilot's switch panel adjacent to the START-GEN switches. Should a generator exceed 31 volts output, the corresponding generator control unit will deenergize the affected generator field circuit and open the generator relay isolating the generator from the respective generator bus. Momentarily depressing the applicable GEN RESET button will reset the generator by closing the affected generator field circuit and closing the generator relay. The GEN RESET buttons have no effect with the corresponding START-GEN switch OFF or the corresponding IGN START and/or GEN circuit breaker open.

GEN LIGHTS

Amber L GEN and R GEN annunciator lights are installed in the glareshield annunciator panel. The lights are controlled by the corresponding generator control circuits and will illuminate whenever the corresponding generator has failed or is off the line due to an undervoltage or overvoltage condition. The light will also illuminate whenever the corresponding START-GEN switch is in either START or OFF and at least one BATTERY switch is On.

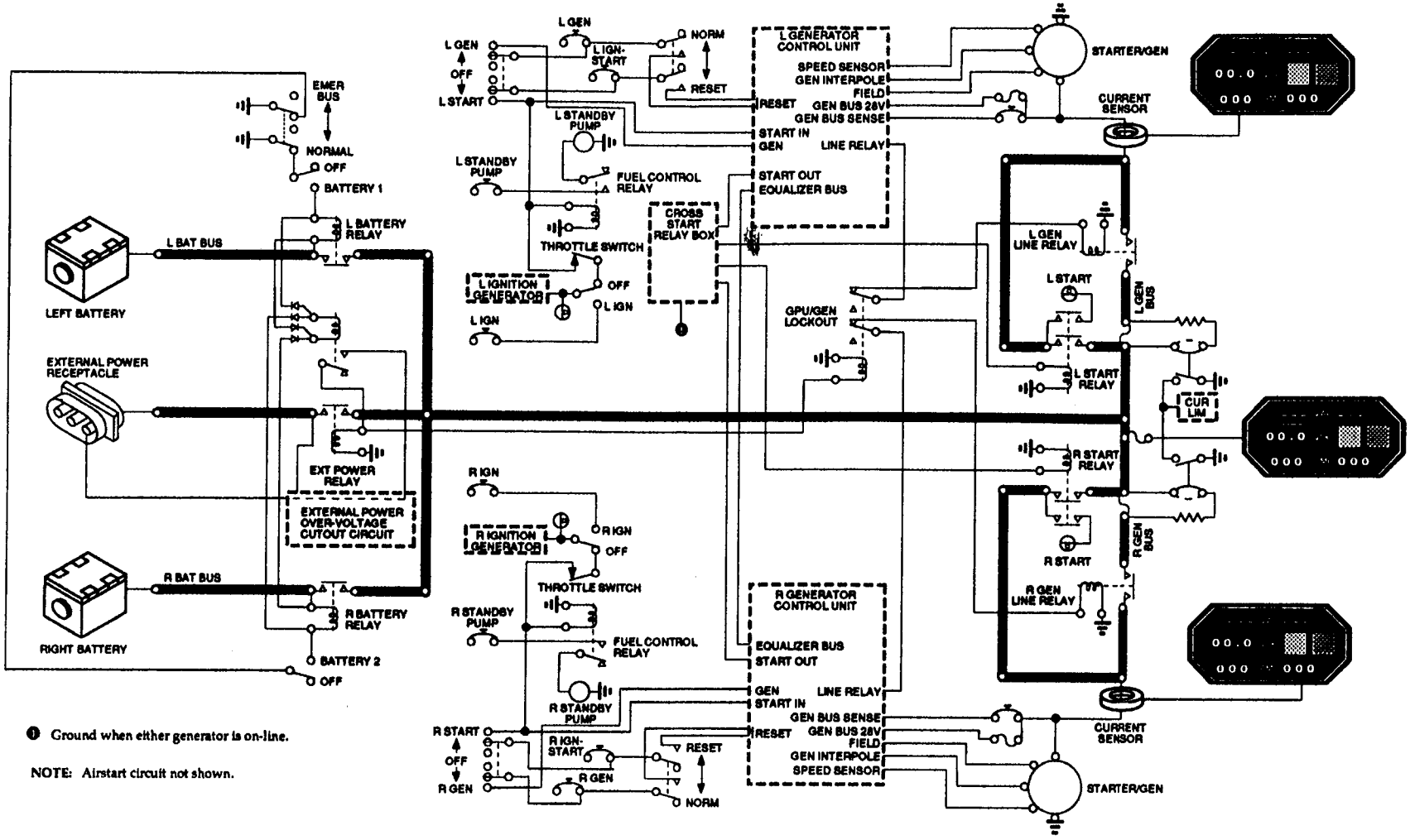

❶ Ground when either generator is on-line.

NOTE: Airstart circuit not shown.

DC GENERATION AND START
Figure 4-1

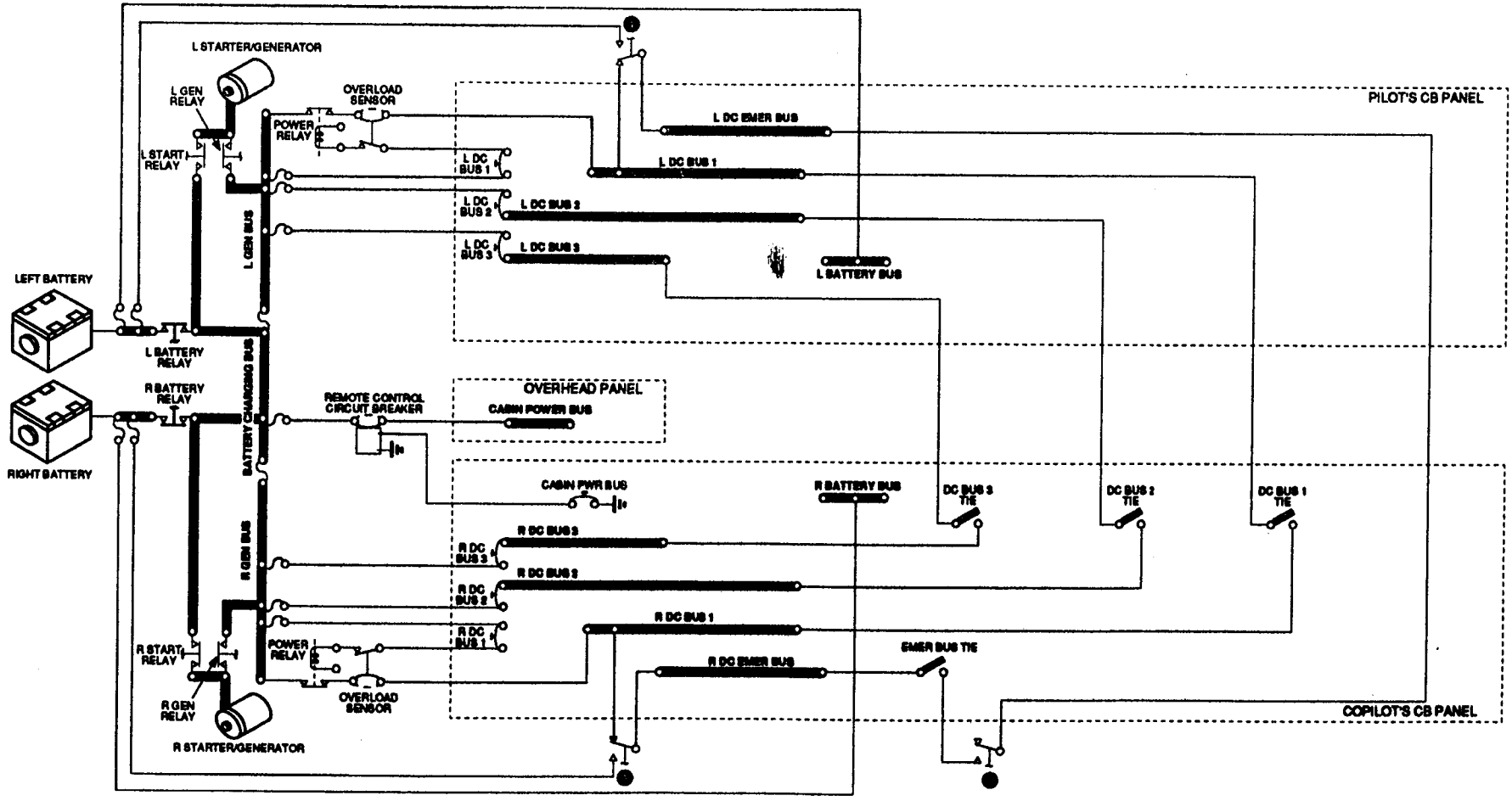

● Controlled by EMER BUS Switch.
See figure 4-4 for schematic of EMER BUS system.

DC POWER DISTRIBUTION
Figure 4-2

CUR LIM LIGHT

The red CUR LIM annunciator light, on the glareshield annunciator panel, is installed to indicate the continuity of the 275-amp current limiters. The 275-amp current limiters connect the battery charging bus to the generator buses. Failure of both 275-amp current limiters will cause the equipment connected to the battery charging bus to be powered from the ship's batteries only. The light is illuminated by sensors wired across the current limiter terminals. A failure of either current limiter will cause the respective sensor to illuminate the CUR LIM light.

DC CIRCUIT BREAKERS

The aircraft DC electrical circuits are protected by push-to-reset, thermal-type circuit breakers. Most AC and DC circuit breakers are located on the pilot's and copilot's circuit breaker panels. Several circuit breakers, which service interior items (READING LTS, TOILET, GALLEY, STEREO), are installed in an overhead panel between the two crew members. The L and R DC BUS 1, DC BUS 2, and DC BUS 3 buses may be interconnected through the DC BUS 1 TIE, DC BUS 2 TIE, and DC BUS 3 TIE circuit breaker/switches on the copilot's circuit breaker panel. Normally the L and R DC buses are not tied together. If it is desired to tie a L DC BUS and R DC BUS together, the appropriate DC BUS TIE circuit breaker/switch must be in the up (closed) position. The DC BUS 1 circuit breaker on each circuit breaker panel controls power to the associated DC BUS 1 bus through control relays. Circuit breakers are grouped together into system types (e.g. ELECTRICAL, LIGHTS, AVIONICS). Power to operate the emergency bus system is supplied from the batteries through the respective EMER BUS CONT circuit breaker (see figure 4-4).

BATTERY OVERHEAT WARNING SYSTEM

On aircraft equipped with nickel-cadmium batteries, a battery overheat warning system is installed to warn the operator of an impending battery overheat condition. The system consists of two thermoswitches installed in each battery, a temperature sensor in each battery, two overheat warning lights, a temperature indicator, and associated aircraft wiring.

BAT 140 AND BAT 160 LIGHTS

The red BAT 140 and BAT 160 warning lights on the glareshield annunciator panel are installed to warn the pilot that a battery is overheating. The lights are operated by thermoswitches installed in the battery links. The BAT 140 light will illuminate in the event either battery reaches a temperature of 140°F (60°C). The BAT 160 light will illuminate in the event either battery reaches a temperature of 160°F (71°C). Since both BAT 140 thermoswitches and both BAT 160 thermoswitches are wired together, the pilot must refer to the BAT TEMP indicator to determine the malfunctioning battery.

BAT TEMP INDICATOR

The BAT TEMP indicator is a dual-reading, vertical-scale instrument and is usually located in the copilot's instrument panel. The indicator face consists of a center scale marked from 50°F to 200°F in 25°F increments and two pointers on opposite margins of the scale. The pointer indicating left (#1) battery temperature is on the left margin and the pointer indicating right (#2) battery temperature is on the right margin. Each pointer is operated by a temperature sensor installed in the corresponding battery cell links. Electrical power to the indicator is 28 VDC supplied through the 1-amp BAT TEMP circuit breaker on the pilot's circuit breaker panel.

EXTERNAL POWER RECEPTACLE

External power may be connected to the aircraft DC electrical distribution system through a standard receptacle located on the left fuselage adjacent to the tailcone access door. To start an engine or operate aircraft systems using external power at least one BATTERY switch must be in the On position; however, the generators will not come on-line with a GPU connected. External power overvoltage protection circuits will open the external power relay and disconnect external power from the aircraft DC distribution system in the event the external power source exceeds approximately 33 volts. Ground power unit amperage must be limited to a maximum of 1000 amps.

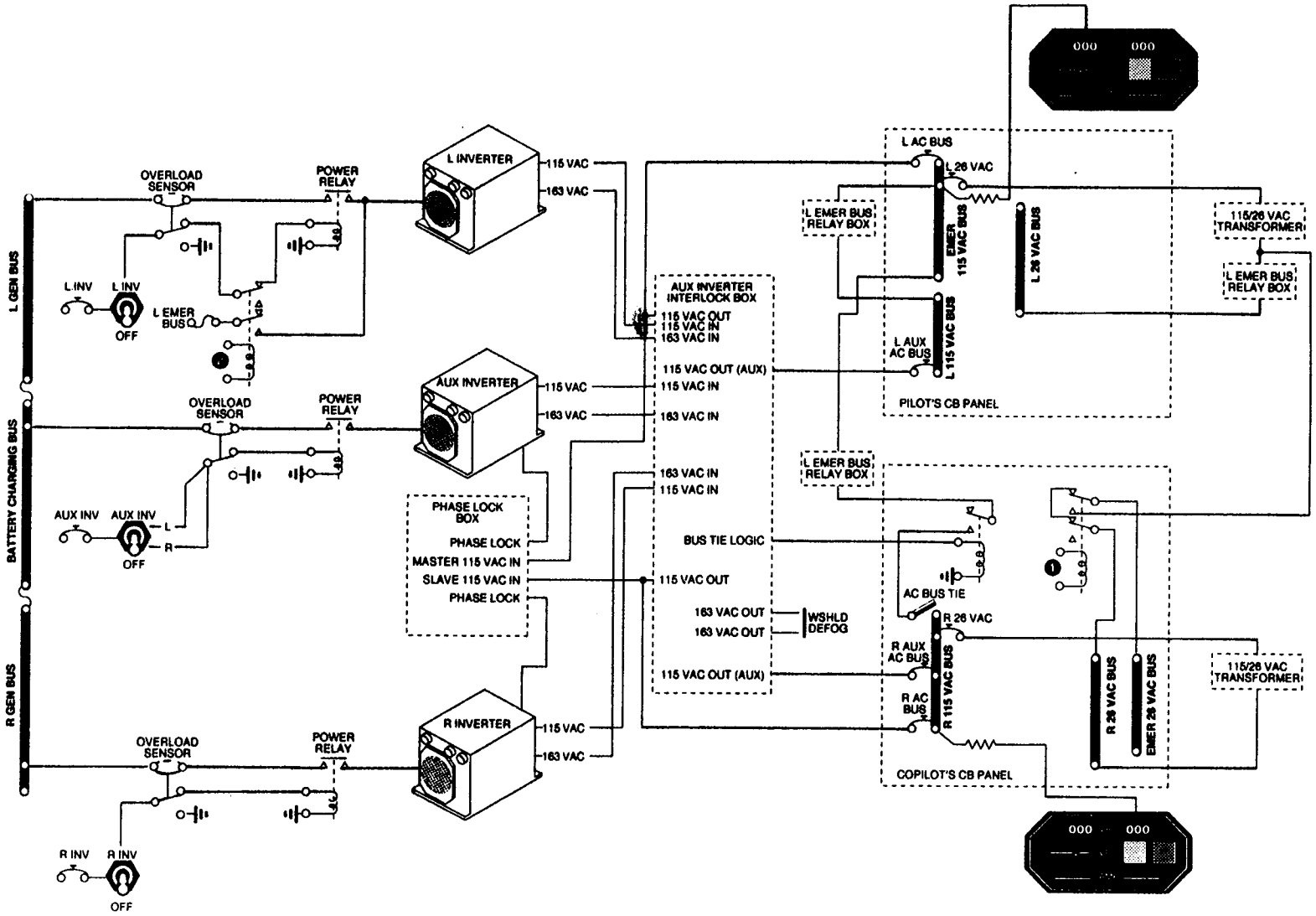

❶ Energized when in EMER BUS mode.

❷ Energized when in EMER BUS mode and L INV switch is On.

AC POWER AND DISTRIBUTION
(Aircraft 31-035 thru 31-060, 31-062 thru 31-065)
Figure 4-3

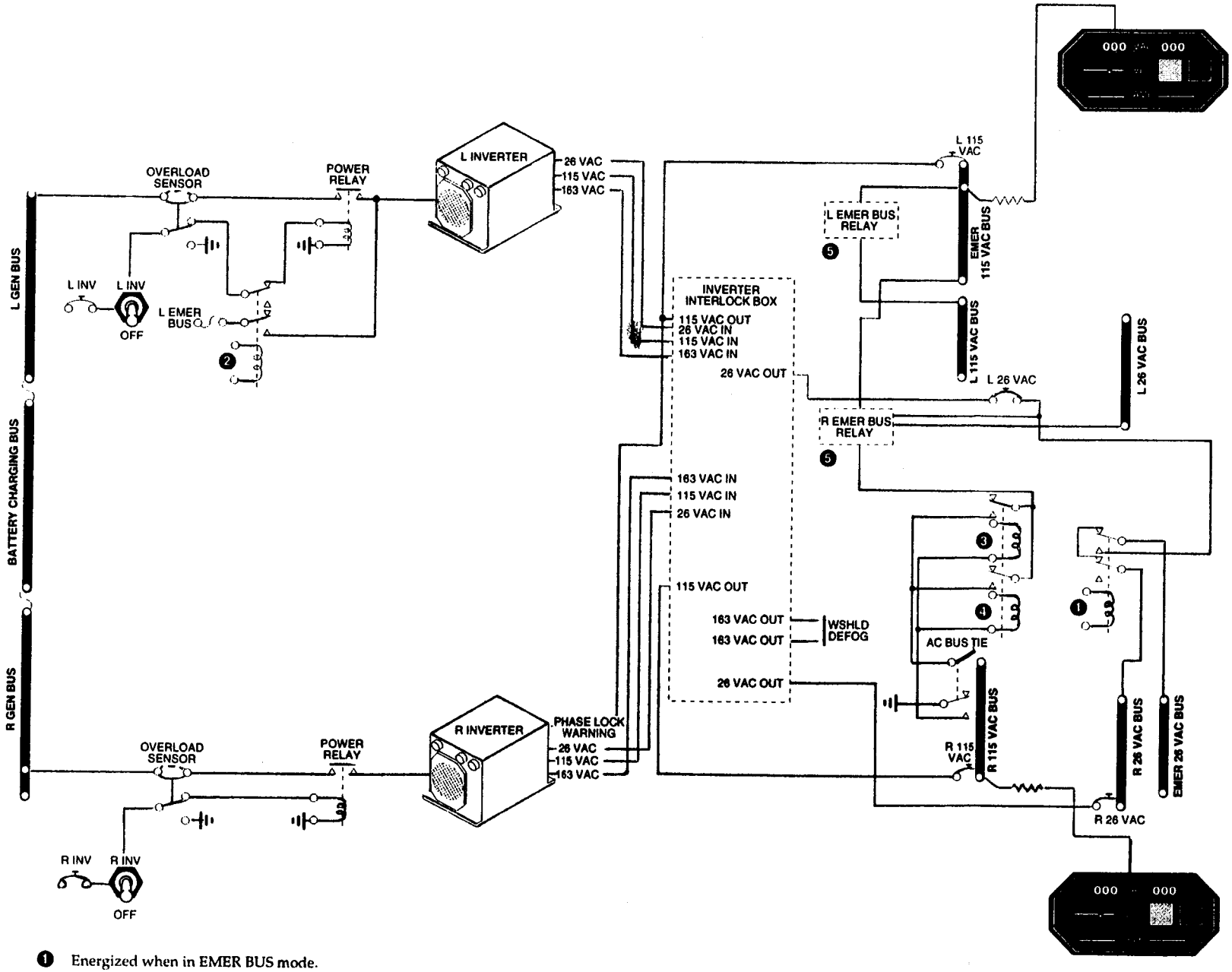

1. Energized when in EMER BUS mode.
2. Energized when in EMER BUS mode and L INV switch is On.
3. Energized when L INV switch is Off and R INV switch is On.
4. Energized when R INV switch is Off and L INV switch is On.
5. Refer to applicable EMERGENCY BUS SYSTEM schematic.

AC POWER AND DISTRIBUTION
(Aircraft 31-061, 31-066 & Subsequent)
Figure 4-4

AC POWER DISTRIBUTION

• *Aircraft 31-035 thru 31-060, 31-062 thru 31-065*

Electrical power for aircraft and avionics systems requiring AC current is supplied through two 115-volt, 400-Hz, 1000 VA solid-state inverters. During normal operation, the left and right inverter output voltages are applied to the left and right AC buses respectively. The left and right AC buses may be interconnected through the 10-amp AC BUS TIE circuit breaker/switch on the copilot's circuit breaker panel. An optional auxiliary (third) inverter may be installed. The auxiliary inverter (if installed) output voltage may be applied to either the left or right AC bus. The normal operating configuration is: 1) L and R AC buses are separated (AC BUS TIE Open); 2) L and R inverters are On; 3) auxiliary inverter (if installed) is Off. The auxiliary inverter is used as a standby unit in case the left or right inverter malfunctions. Each AC bus is intended to be powered by only one inverter. Therefore, the AC BUS TIE switch should only be closed after removing power from one of the buses and setting the respective INVERTER switch to OFF. Also, the auxiliary inverter (if installed) should only be switched into an AC bus after setting the applicable INVERTER switch to OFF. The inverter interlock box will not allow two operating inverters to connect to one bus. Likewise, if the L and R AC buses are powered up and the AC BUS TIE is then closed, the interlock box does not allow the two buses to tie together. A phase lock box keeps the output of each inverter in-phase. Each inverter also has a separate 163-volt output which is used to power the windshield defog system. Input power to operate the left and right inverters is 28 VDC supplied from the left and right generator buses respectively. Input power for the auxiliary inverter is supplied from the battery charging bus.

Overload sensors are installed for each inverter to protect the associated inverter from damage due to an overload. Basically, each overload sensor is a 60-amp, thermal-type circuit breaker, mechanically connected to a switch. Should an overload condition occur, the circuit breaker will reposition the switch to de-energize the power relay thereby removing DC input power to the affected inverter. Additionally, the switch will apply a ground to trip the affected inverter's control circuit breaker. When the overload sensor circuit breaker cools, the switch will reset; however, the power relay will not energize due to the open control circuit breaker. After the malfunction has been corrected and the affected inverter control circuit breaker has been reset, the power relay will energize and the affected inverter will come back on line.

Autotransformers are installed to provide power for aircraft and avionic systems requiring 26 VAC. The autotransformers are supplied 115 VAC through the respective 2-amp 26 VAC BUS circuit breaker on the pilot's or copilot's circuit breaker panels.

• *Aircraft 31-061, 31-066 & subsequent*

Electrical power for aircraft and avionics systems requiring AC power is supplied through two 115-volt, 400 Hz, 1500 VA, solid state inverters. During normal operation, the left and right inverter output voltages are applied to the left and right AC buses respectively. The left and right AC buses may be interconnected through the 15-amp AC BUS TIE circuit breaker/switch on the copilot's circuit breaker panel. Each AC bus is intended to be powered by only one inverter. Therefore, the AC BUS TIE switch should only be closed after removing power from one of the buses and setting the respective INVERTER switch to OFF. If the L and R AC buses are powered up and the AC BUS TIE is then closed, a relay located in the copilot's circuit breaker panel does not allow the two buses to tie together. A phase lock function within the right inverter keeps the output of each inverter in-phase. Each inverter also has a separate 163-volt output which is used to power the windshield defog system. Power for aircraft and avionic systems requiring 26-volt input is provided by each inverter through the inverter interlock box to each corresponding 26 VAC bus. Input power to operate the left and right inverters is 28 VDC supplied from the left and right generator buses respectively.

Overload sensors are installed for each inverter to protect the associated inverter from damage due to an overload. Basically, each overload sensor is an 80-amp, thermal-type circuit breaker, mechanically connected to a switch. Should an overload condition occur, the circuit breaker will reposition the switch to de-energize the power relay, thereby removing DC input power to the affected inverter. Additionally, the switch will apply a ground to trip the affected inverter's control circuit breaker. When the overload sensor circuit breaker cools, the switch will reset; however, the power relay will not energize due to the open control circuit breaker. After the malfunction has been corrected and the affected inverter control circuit breaker has been reset, the power relay will energize and the affected inverter will come back on line.

INVERTER SWITCHES

Left and Right Inverters: Operation of the left and right inverters is controlled through the two INVERTER switches on the pilot's switch panel. The switch controlling the left inverter is labeled L-OFF and the switch controlling the right inverter is labeled R-OFF. When either switch is moved to the On (L or R) position, the associated power relay is energized to supply input power to the associated inverter. The inverter control circuits operate on 28 VDC supplied through the 2-amp L INV and R INV circuit breakers on the pilot's and copilot's circuit breaker panels respectively.

Auxiliary Inverter (if installed): Operation of the auxiliary inverter (if installed) is controlled through the AUX INV switch on the pilot's switch panel. The switch has three positions: L, R, and OFF. When the switch is set to L or R, the auxiliary inverter power relay will be energized to supply input power to the inverter. Inverter 115 VAC output will be directed to the L AC BUS or R AC BUS through the inverter interlock box and the L AUX AC BUS or R AUX AC BUS circuit breaker depending upon whether L or R was selected. The auxiliary inverter control circuits operate on 28 VDC supplied through the 2-amp AUX INV circuit breaker on the copilot's circuit breaker panel.

AC CIRCUIT BREAKERS

The aircraft AC electrical circuits are protected by push-to-reset magnetic-type circuit breakers. *Aircraft 31-035 thru 31-060, 31-062 thru 31-065,* AC circuit breakers are denoted by a white ring on the panel overlay. *Aircraft 31-061, 31-066 and subsequent,* white rings on the overlay denote AC circuit breakers not on the EMER BUS, and segmented red/white rings on the overlay denote AC circuit breakers on the EMER BUS. The copilot's circuit breaker panel also contains the AC BUS TIE circuit breaker/switch which is used to tie the L AC BUS and R AC BUS together in the abnormal situation of single inverter operation. Circuit breakers are grouped together into system types (e.g. ELECTRICAL, LIGHTS, AVIONICS).

ELECTRIC POWER MONITOR

An electric power monitor is installed on the pilot's instrument panel to monitor left and right AC bus voltage, left and right DC generator load, and the DC charging bus voltage. Digital displays are used for voltage and amperage readouts. Each parameter being monitored is divided into Normal, Caution and Warning ranges. Refer to airplane Flight Manual for instrument range description. Whenever any parameter goes from the normal range to the caution range, the indicator's amber light and affected parameter will flash. If the parameter progresses into the warning range, the indicator's red light and affected parameter will flash. The amber ELEC PWR light (annunciator panel) will illuminate (steady or flashing) anytime an amber or red light on the indicator is illuminated (steady or flashing). Whenever any parameter goes into the warning range, the MSTR WARN lights will flash. Depressing the amber or red light, as applicable, will cause the lights and displays to stop flashing. Depressing either MSTR WARN light will cancel the flashing of red warnings, the affected parameter, and the amber ELEC PWR light. The amber or red light will remain illuminated (steady) until the affected parameter returns to the normal range. Cau-

tion and warning annunciations are inhibited during starter engagement.

A malfunction which affects the accuracy of the indicator will cause EE.E to be displayed in the VDC readout and dashes "-" in all other readouts.

Whenever the left and right inverters are out-of-phase, a "C" will flash in the least significant digit of each VAC display.

The electric power monitor is operative during EMER BUS mode.

EMERGENCY BUS SYSTEM

An emergency bus system is installed to provide 28 VDC, 115 VAC, and 26 VAC to selected systems in the event of a dual generator system failure or to quickly de-energize and isolate all nonessential equipment in the event of electrical smoke or fire. The system uses the aircraft's batteries to supply DC power to the DC equipment on the emergency bus and uses the left inverter to provide AC power to AC equipment on the emergency bus. *Aircraft 31-035 thru 31-065, except 31-061,* AC and DC emergency bus circuit breakers are denoted by a red collar. *Aircraft 31-061, 31-066 and subsequent,* AC emergency bus circuit breakers are denoted by segmented red/white rings on the overlay and DC circuit breakers are denoted by red rings on the overlay. The EM BUS TIE is located on the copilot's circuit breaker panel. The emergency bus system control circuits operate on 28 VDC supplied by the batteries through the EMER BUS CONT circuit breakers in the pilot's and copilot's circuit breaker panel.

L EMERGENCY BUS	R EMERGENCY BUS
FLOOD LTS †	AHS 2 *
L 26 VAC † (31-035 thru 31-060, 31-062 thru 31-065)	STBY HSI *
EL PWR MON	EMER BAT 2
L INV	R FIRE DET
EMER BAT 1	R FIRE EXT
L FIRE DET	R IGN
L FIRE EXT	R FW SOV
L IGN	R JET PUMP-XFR VAL
L FW SOV	XFLO VALVE
L JET PUMP-XFR VAL	FUEL QTY
PILOT A/S	AHS 2
PILOT ALTM VSI	STBY HSI
ADC 1	WARN LTS
WARN LTS	SEC PITCH TRIM
PRI PITCH TRIM	FLAPS
L STALL WARN	SPOILER
WHEEL MASTER	R STALL WARN
L ITT	TRIM-FLAP IND
L PITOT HT	WARN HORNS
L BLEED AIR	GEAR
L EMER PRESS	R ITT
L AUDIO	R PITOT HT
COMM 1	R BLEED AIR
NAV 1	R EMER PRESS
ADF 1	R AUDIO

*** 26 VAC**
† 115 VAC

NOTE: Circuit Breakers on Battery Buses are powered regardless of EMER BUS Switch position. Also, loads powered by the emergency batteries will operate regardless of EMER BUS Switch position (refer to EMERGENCY POWER SYSTEM).

EMER BUS SWITCH

The EMER BUS switch on the pilot's switch panel is used to select the power source for the emergency buses. The switch has two positions—EMER BUS and NORMAL.

When the EMER BUS switch is in the NORMAL position, the emergency bus system relays will be deenergized and equipment on the emergency buses will be powered from the normal electrical system. DC equipment on the emergency buses will be powered through the associated DC BUS 1. AC equipment on the emergency bus will be powered through the L AC bus and R 26 VAC bus. When the switch is in the EMER BUS position, the battery relays will be deenergized, the emergency bus system relays will be energized, and equipment on the emergency buses will be powered through the emergency bus system. When the battery relays are deenergized, the aircraft batteries are completely isolated from the battery charging bus and the normal DC power distribution system. When EMER BUS is selected electrical power will be distributed as follows:

1. DC power for the primary pitch trim motor will be switched from the battery charging bus to the LH (#1) aircraft battery.
2. DC power for the auxiliary hydraulic pump will be switched from the battery charging bus to the RH (#2) aircraft battery.
3. DC powered equipment on the emergency buses will be switched from the associated DC BUS 1 to the aircraft batteries.
4. The LH Inverter is on the DC EMER BUS and provides 115 VAC to the AC EMER BUS. *On aircraft 31-035 thru 31-060, 31-062 thru 31-065,* 115 VAC is supplied to the LH 26 VAC transformer and 26 VAC output from the transformer will be applied to the appropriate circuit breakers. *On aircraft 31-061, 31-066 & subsequent,* 26 VAC output from the LH inverter is applied to the appropriate circuit breakers.
5. The DC voltmeter will display the voltage of both batteries (EM BUS TIE must be closed).

NOTE:

- The conditions just described assume that both BATTERY switches are in the On position.
- If only the BATTERY 1 switch is On, the auxiliary hydraulic pump will not be available and the DC voltmeter will display the voltage of the LH (#1) battery. All other conditions will be as described.
- If only the BATTERY 2 switch is On, Primary Pitch Trim will not be available and the DC voltmeter will display the voltage of the RH (#2) battery. All other conditions will be as described.

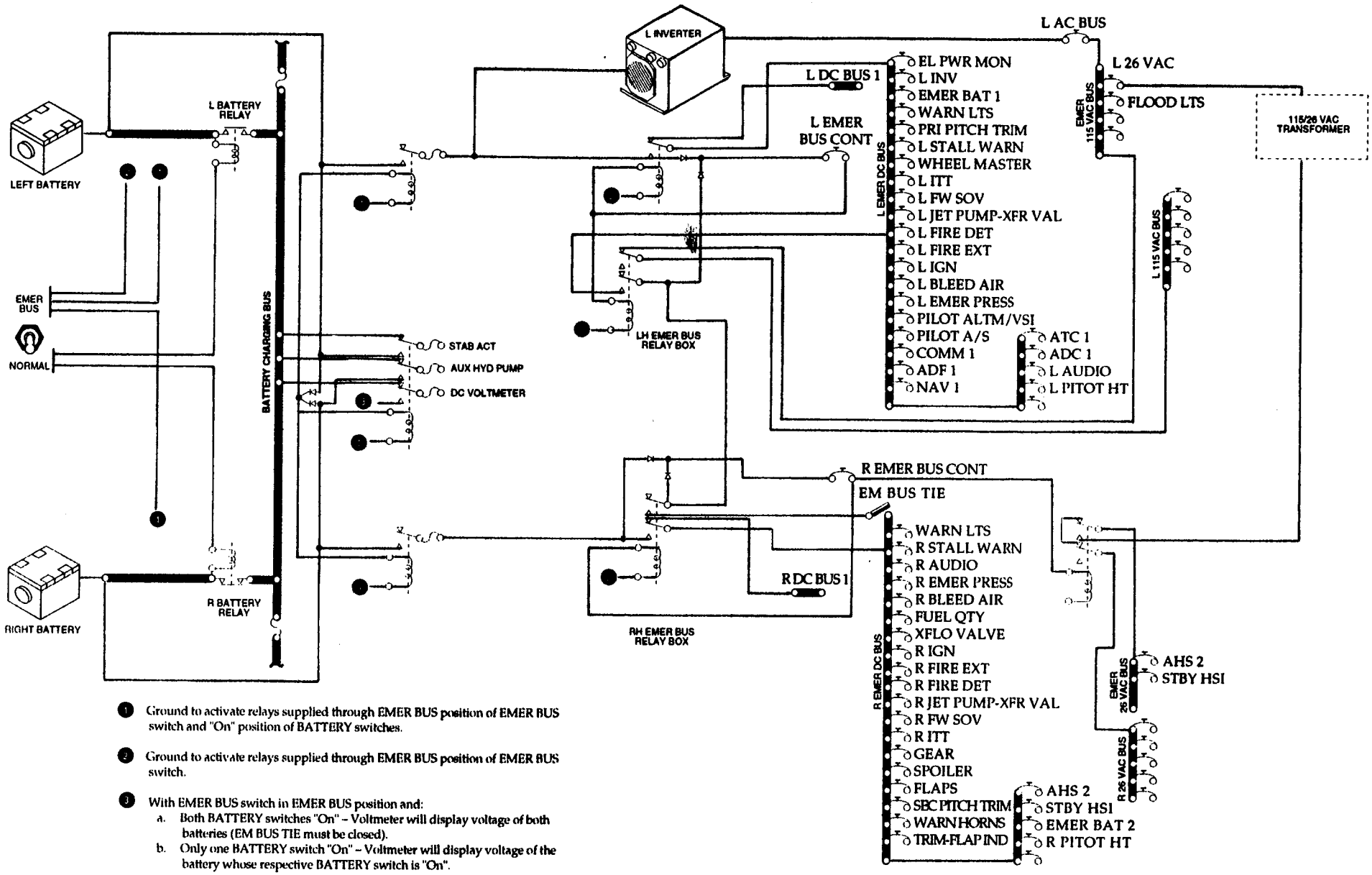

1. Ground to activate relays supplied through EMER BUS position of EMER BUS switch and "On" position of BATTERY switches.
2. Ground to activate relays supplied through EMER BUS position of EMER BUS switch.
3. With EMER BUS switch in EMER BUS position and:
   a. Both BATTERY switches "On" – Voltmeter will display voltage of both batteries (EM BUS TIE must be closed).
   b. Only one BATTERY switch "On" – Voltmeter will display voltage of the battery whose respective BATTERY switch is "On".

EMERGENCY BUS SYSTEM
(Aircraft 31-035 thru 31-060, 31-062 thru 31-065)
Figure 4-5

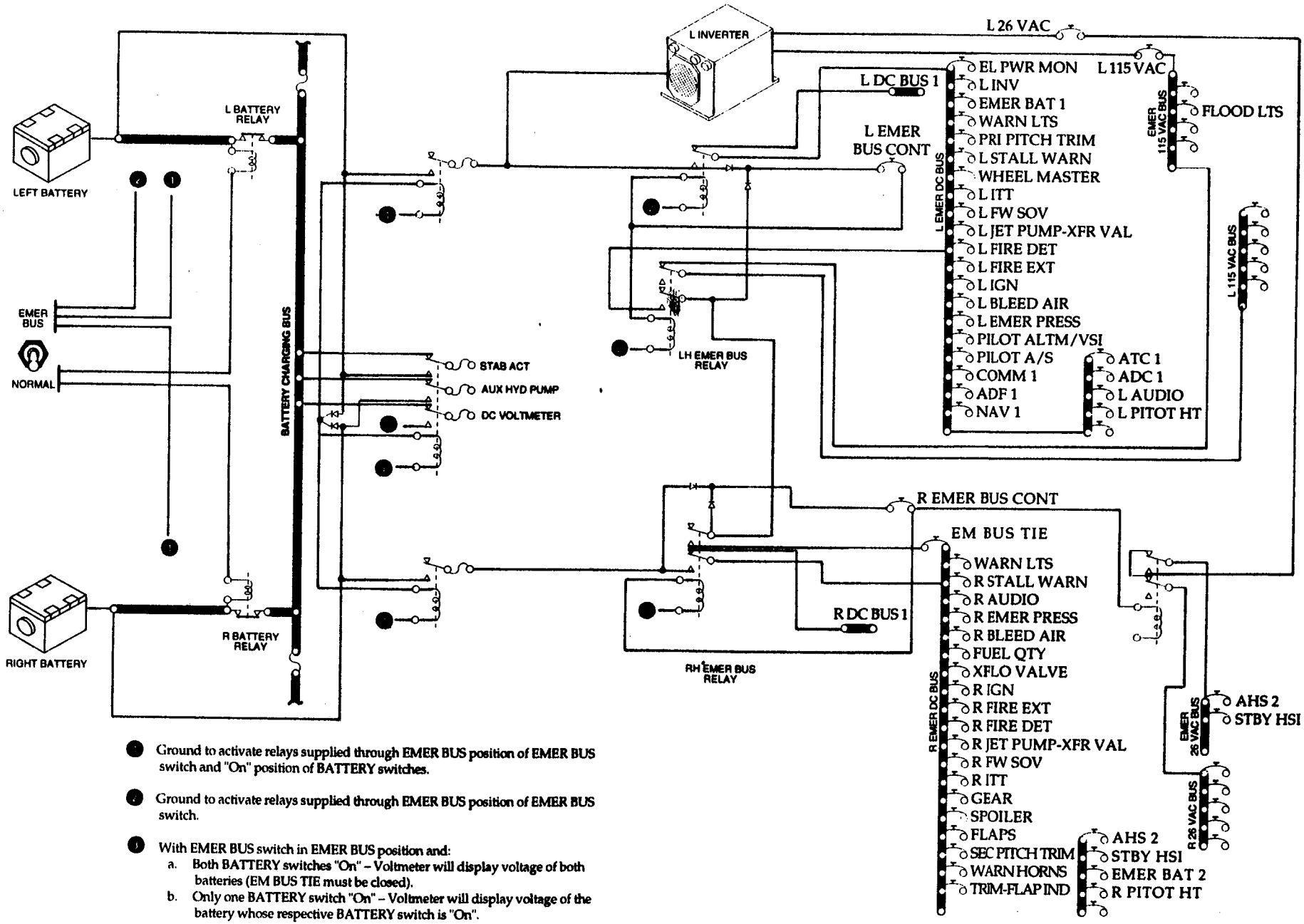

- Ground to activate relays supplied through EMER BUS position of EMER BUS switch and "On" position of BATTERY switches.
- Ground to activate relays supplied through EMER BUS position of EMER BUS switch.
- With EMER BUS switch in EMER BUS position and:
  a. Both BATTERY switches "On" – Voltmeter will display voltage of both batteries (EM BUS TIE must be closed).
  b. Only one BATTERY switch "On" – Voltmeter will display voltage of the battery whose respective BATTERY switch is "On".

EMERGENCY BUS SYSTEM
(Aircraft 31-061, 31-066 & Subsequent)
Figure 4-6

AVIONICS POWER SYSTEM

An avionics power system is installed to allow selected DC powered avionics systems to be powered up through the use of two master switches. The system consists of a LEFT MASTER and RIGHT MASTER switch, and two control relays. The control relays operate on 28 VDC supplied through the corresponding 1-amp AV MASTER circuit breaker in the associated circuit breaker panel. The AVIONICS MASTER switches have no effect when EMER BUS is selected and the generators are off-line.

AVIONICS MASTER SWITCH

The LEFT MASTER switch is installed in the pilot's switch panel and the RIGHT MASTER switch is installed in the copilot's switch panel. These two switches allow the crew to turn certain avionic equipment off and on without using the individual systems' switches.

Refer to the Airplane Flight Manual for a listing of equipment controlled by the MASTER switches. The actual equipment affected may vary with customized wiring options.

EMERGENCY POWER SYSTEM

The aircraft is equipped with an emergency power system to supply electrical power to selected equipment in the event of a normal electrical power system failure. Power for the emergency power system is supplied by two emergency power units located in the nose avionics compartment. Each emergency power unit contains a 12-cell lead-acid battery to provide electrical power. The emergency power supply batteries are trickle charged from the aircraft normal electrical system through the 7.5-amp EMER BAT circuit breakers on the pilot's and copilot's circuit breaker panel.

The emergency power system will provide electrical power for the standby attitude gyro, fan speed (N1) indicators, landing gear position lights, and selected instrument lights (standby attitude gyro, N1 indicators, standby airspeed indicator, standby altimeter, standby HSI and magnetic compass). Operating times of equipment powered by EMER BAT 1 power supply is presented in the Airplane Flight Manual. The EMER BAT 2 power supply provides 2 - 11 minutes of backup power for the Attitude Heading Reference System (AHS 1 & 2). The system is controlled through the EMER BAT 1 and EMER BAT 2 switches on the pilot's switch panel. An amber EMR PWR 1 and EMR PWR 2 annunciator on the center instrument panel will illuminate whenever electrical power from the associated emergency power supply is being used.

EMER BAT SWITCH

The EMER BAT switches have two positions: On (EMER BAT 1 or 2) and OFF. With the switch in the On position, electrical power from the emergency power supply is applied to the standby attitude gyro and additional power for other systems is not used because 28 VDC from the normal electrical system is balanced against it. In the event of a failure of the normal electrical system, the balanced condition is removed and electrical power from the emergency power supplies will illuminate the EMR PWR annunciators, operate the Fan Speed (N_1) indicators, landing gear position lights, selected instrument lights (standby attitude gyro, N_1 indicators, standby airspeed indicator, standby altimeter, standby HSI and magnetic compass), and AHS 1 & 2.

EXTERIOR LIGHTING

LANDING/TAXI LIGHTS

A landing/taxi light is installed on each main landing gear. The lights are controlled by the LDG LT switches on the center switch panel. The LDG LT switches have three positions: On (L and R), TAXI, and OFF. The landing light control circuits are wired through the main gear down-and-locked switches; therefore, the landing lights are inoperative when the landing gear is not down and locked. When the LDG LT switches are placed in the On position, control circuits apply full 28 VDC to the landing lights and the lights will illuminate full bright.

When the LDG LT switches are in the TAXI position, resistors shunt the lamp input power to 21 VDC and the lights are dimmed. In order to extend the service life of the lamps, it is recommended that the lights be used as sparingly as possible in the LDG LT mode. The lamps are supplied electrical power through 20-amp current limiters. The control circuits operate on 28 VDC supplied through the 7.5-amp L and R LDG - TAXI LT circuit breakers on the pilot's and copilot's circuit breaker panels respectively.

Some aircraft are equipped with a pulsating landing light option which is used in conjunction with the pulsating recognition light. On these aircraft, a pulse controller unit controls the landing lights by delivering pulsating DC current at approximately 45 cycles per minute. The effect of this pulsating current is to cause the bulb's brightness to continually vary between approximately 40% and 100% of full bright. The pulsating feature is activated when the RECOG light switch is set to the PULSE position, the applicable LDG LT switch is OFF and the landing gear is down and locked. When the LDG LT switch is positioned to On or TAXI, the landing/taxi lights will illuminate steadily.

NAVIGATION LIGHTS

Navigation lights are installed in the forward portion of the wing tips and in the vertical stabilizer aft bullet. The lights are controlled through the NAV switch in the LIGHTS group on the center switch panel. When the NAV light switch is placed in the On (NAV) position, the navigation lights will illuminate. Additionally, setting the NAV light switch to On (NAV) automatically dims most instrument panel avionics annunciators as well as the LANDING GEAR panel lights, EFIS CONTROL reversionary mode lights, and most instrument panel and pedestal "peanut" lights. Electrical power for the navigation lights is 28 VDC supplied through the two 5-amp current limiters connected to the battery charging bus. Electrical power for the control circuit is 28 VDC supplied through the 5-amp NAV LTS circuit breaker on the pilot's circuit breaker panel.

ANTI-COLLISION (BEACON) LIGHTS

AIRCRAFT WITH OSCILLATING BEACONS

On aircraft 31-035 thru 31-088 not incorporating SB 31-33-7 "Installation of Solid-State Anti-Collision Light Assemblies", dual-bulb anti-collision lights are mounted on top of the vertical stabilizer and on the bottom of the fuselage. The tandem mounted bulbs oscillate approximately 180° at 45 cycles per minute. The beam is concentrated by an integral lens that produces an illusion of 90 flashes per minute due to the oscillating. The lights are controlled through the BCN/STROB light switch in the LIGHTS group on the center switch panel. Whenever the switch is set to BCN or BCN/STROB, the anti-collision (beacon) lights will operate. The lights operate on 28 VDC supplied through the 7.5-amp BCN LTS circuit breaker on the copilot's circuit breaker panel.

AIRCRAFT WITH SOLID-STATE BEACONS

On aircraft 31-089 thru 31-173 and prior aircraft incorporating SB 31-33-7 "Installation of Solid-State Anti-Collision Light Assemblies", single-bulb, solid-state, anti-collision lights are mounted on top of the vertical stabilizer and on the bottom of the fuselage. The beacons on the bottom of the fuselage and the top of the vertical tail flash alternately 45 to 55 flashes per minute per beacon. The lights are controlled through the BCN/STROB light switch in the LIGHTS group on the center switch panel. Whenever the switch is set to BCN or BCN/STROB, the anti-collision (beacon) lights will operate. Each light has its own self-contained power source. The lights operate on 28 VDC supplied through the 7.5-amp BCN LTS circuit breaker on the copilot's circuit breaker panel.

On aircraft 31-174 and subsequent, a solid-state, red lens, single-bulb, anti-collision light is mounted on top of the vertical stabilizer. On the bottom of the fuselage is a dual-purpose anti-collision light that incorporates two flashtubes — one with an aviation red lens and one with a clear lens. The anti-collision lights are controlled through the BCN/STROBE light switch in the LIGHTS group on the center switch panel. When the switch is placed in the BCN/STROBE position, the red lens beacon light on the bottom fuselage and the red lens beacon light on the vertical stabilizer will flash if the aircraft's weight is on the wheels. When the aircraft's weight is off the wheels, only the upper beacon will flash. When the switch is placed in the BCN position, the red lens beacon light on the bottom fuselage will flash whether or not the aircraft's weight is on the wheels. *On aircraft incorporating SB 31-33-12, Modification of Strobe Light Switch,* when the BCN/STROBE switch is in the STROBE position the upper beacon will operate regardless of weight on wheels. When the BCN/STROBE switch is in the BCN position, both beacons will flash. The beacon light on the top of the vertical stabilizer will flash in either switch position at a rate of 45 to 55 flashes per minute independent of the beacon/strobe light on the bottom fuselage, which flashes at a rate of approximately 50 flashes per minute. The anti-collision lights mounted on top of the vertical stabilizer and on the bottom of the fuselage operate on 28 VDC supplied through the 7.5 amp BCN LTS circuit breaker on the copilot's circuit breaker panel.

STROBE LIGHTS

On aircraft 31-035 thru 31-173, strobe lights are installed on the outboard side of each winglet and in the vertical stabilizer aft bullet. The strobe system consists of lamps, a power supply unit for each light, and the BCN/STROB light switch in the LIGHTS group on the center switch panel. When the switch is set to BCN/STROB, all strobes will flash. Each light will flash at a rate of approximately 50 pulses per minute. Electrical power to the system is supplied through the 7.5-amp STROBE LTS circuit breaker on the pilot's circuit breaker panel.

On aircraft 31-174 and subsequent, clear lens strobe lights are installed on the vertical stabilizer aft bullet and as a component of the dual purpose anti-collision light mounted on the bottom of the fuselage. The strobe system consists of lamps, a power supply unit, and the BCN/STROBE light switch in the LIGHTS group on the center switch panel. When the BCN/STROBE light switch is set to BCN/STROBE, and the aircraft's weight is not on the wheels, both strobe lights will flash. When the clear lens strobe lights are not desired in flight, the switch must be set to BCN or OFF. *On aircraft incorporating SB 31-33-12, Modification of Strobe Light Switch,* when the BCN/STROBE light switch is set to STROBE, both strobes will operate regardless of weight on wheels. When the clear

lens strobe lights are not desired in flight, the switch must be set to BCN or OFF. The bottom fuselage strobe light and the vertical stabilizer aft bullet strobe light operates on 28 VDC supplied through the 7.5 amp STROBE LTS circuit breaker on the pilot's circuit breaker panel. Each light will independently flash at a rate of approximately 50 pulses per minute.

RECOGNITION LIGHT

A recognition light is installed on the upper leading edge of the vertical stabilizer. The light is controlled through the RECOG light switch in the LIGHTS group on the center switch panel. When the switch is placed in the On (RECOG) position, control circuits apply full 28 VDC from the battery charging bus to illuminate the light. For greatest lamp life, it is recommended that the recognition light be turned OFF at altitudes of 18,000 feet or above. Electrical power for the recognition light is 28 VDC supplied through a 20-amp current limiter connected to the battery charging bus. The control circuits operate on 28 VDC supplied through the 7.5-amp RECOG LT circuit breaker on the copilot's circuit breaker panel.

Some aircraft are equipped with a pulsating recognition light option. On these aircraft, the RECOG light switch has a middle position labelled PULSE and a pulse controller unit. When the switch is placed in the PULSE position, 28 VDC from the PULSE/RECOG LT circuit breaker is applied to the pulse controller unit which in turn lights the recognition light by delivering pulsating DC current at approximately 45 cycles per minute. The effect of this pulsating current is to cause the bulb's brightness to continually vary between approximately 40% and 100% of full bright. This feature results in enhanced aircraft recognition and improved bulb life. Also, the landing lights will pulse alternately with the recognition light if the landing gear is down and locked and the LDG LT switches are OFF. On aircraft with a pulsating recognition light, a 7.5-amp PULSE/RECOG LT circuit breaker on the copilot's circuit breaker panel supplies 28 VDC to the pulse controller unit.

WING INSPECTION LIGHT

For a description of the wing inspection light, refer to ANTI-ICE AND ENVIRONMENTAL.

COCKPIT LIGHTING

INSTRUMENT PANEL FLOODLIGHTS

A cold-cathode, fluorescent light is installed in the glareshield assembly to provide flood illumination of the instrument panel. Electrical power to operate the light is 600 VAC supplied through a power supply unit. The light is controlled and dimmed through the FLOOD rheostat switch on the pilot's dimmer panel. Electrical power to the power supply unit is 115 VAC supplied through the 2-amp FLOOD LTS circuit breaker on the pilot's circuit breaker panel. Instrument panel floodlights are operative during EMER BUS mode.

INSTRUMENT LIGHTS

Incandescent lighting is installed for the pilot's indicators, copilot's indicators, center instrument panel indicators, pedestal indicators, and magnetic compass. The lights are powered by 5 VDC supplied by three power supply units. Electrical power to the power supply units is 28 VDC supplied through the 7.5-amp INSTR LTS circuit breakers on the pilot's and copilot's circuit breaker panels. The lights are controlled and dimmed by the INSTR rheostat switch on the pilot's dimmer panel and the PEDESTAL and INSTR rheostat switches on the copilot's dimmer panels.

Pilot's INSTR dimmer switch: The pilot's INSTR dimmer switch provides dimming for the engine instruments, R ENG indicator, EMERG AIR pressure indicator, HYD PRESS indicator, FLAP indicator, WING TEMP indicator, anti-skid panel, electric power monitor, autopilot controller, pilot's angle-of-attack indicator, pilot's flight instruments, and magnetic compass.

Copilot's INSTR dimmer switch: The copilot's INSTR dimmer switch provides dimming for the TEMP CONT indicator, CABIN TEMP indicator, copilot's angle-of-attack indicator, copilot's flight instruments, avionics in the center instrument panel, standby attitude gyro, standby airspeed indicator, standby altimeter, and pressurization instruments.

Copilot's PEDESTAL dimmer switch: The PEDESTAL dimmer switch on the copilot's dimmer panel provides dimming for the panels and avionics installed in the pedestal.

SWITCH PANEL LIGHTING

Electroluminescent panel lighting is provided for the pilot's and copilot's switch panels, audio control panels, the center switch panel, system test switch panel, anti-skid panel, circuit breaker panels, pilot's and copilot's dimmer panels, landing gear control panel, pressurization

module and oxygen control panel. The panels are supplied 115 VAC through the 2-amp EL LTS circuit breakers on the pilot's and copilot's circuit breaker panels. The lights are controlled and dimmed through the EL PNL rheostat switches on the pilot's and copilot's dimmer panels.

Pilot's EL PNL dimmer switch: The pilot's EL PNL dimmer switch controls the electroluminescent lighting of the pilot's switch panels, the center switch panel, the anti-skid panel, the system test switch panel, the pilot's audio control panel, the oxygen control panel, the pilot's dimmer panel and the pilot's circuit breaker panel. *On aircraft 31-119 and subsequent,* a separate CB PNL dimmer switch controls the electroluminescent lighting for the pilot's circuit breaker panel.

Copilot's EL PNL dimmer switch: The copilot's EL PNL dimmer switch controls the electroluminescent lighting of the copilot's switch panel, the copilot's audio control panel, the landing gear control panel, the pressurization module, the copilot's dimmer panel and the copilot's circuit breaker panel. *On aircraft 31-119 and subsequent,* a separate CB PNL dimmer switch controls the electroluminescent lighting for the copilot's circuit breaker panel.

MAP READING LIGHTS

Map reading lights are located on the left and right cockpit sidewalls above the circuit breaker panels. Each lamp is mounted on a flexible conduit and is controlled by a rheostat switch located on the base of the assembly. The lights operate on 28 VDC supplied through the 7.5-amp INSTR LTS circuit breakers on the pilot's and copilot's circuit breaker panels.

DOME LIGHTS

Dome lights are installed in the cockpit overhead panel. These lights may be used to illuminate the entire cockpit area. The lights are controlled by two separate electrical circuits. A rocker switch next to each light has three positions ON-Off-REMOTE. The first electrical circuit does not require a BATTERY switch to be "on". Placing the respective dome light switch to REMOTE will enable the light to be illuminated by setting the cabin entrance STEP light switch On. The light will be supplied 28 VDC through the 5-amp ENTRY LTS circuit breaker on the pilot's circuit breaker panel. The second electrical circuit requires a BATTERY switch to be On. Placing the respective dome light switch to ON will illuminate the selected dome light. The light will be supplied 28 VDC through the 2-amp CABIN LTS circuit breaker on the copilot's circuit breaker panel.

An optional adjustable overhead dome light may be installed to allow more light to be directed over the control wheels. Adjustments are made by the BRT/DIM control knob located next to each ON-Off-REMOTE switch.

PASSENGER COMPARTMENT LIGHTING

The passenger compartment lighting consists of cabin lights, table lights, passenger reading lights, entry lights, cabin baggage compartment lights, No Smoking/Fasten Seat Belt signs, and the refreshment cabinet lights.

FLUORESCENT CABIN LIGHTS (IF INSTALLED)

Cabin lighting is provided by cold-cathode, fluorescent lighting recessed in the cabin headliner. The lights are illuminated through a power supply unit which operates on 28 VDC supplied through the 2-amp or 5-amp CABIN LTS circuit breaker (depending on aircraft configuration) on the copilot's circuit breaker panel. Some cabin lighting controls consist of rocker switches while others consist of membrane-type switches.

The rocker switches, labeled FORWARD CABIN LIGHTS, CENTER CABIN LIGHTS, and AFT CABIN LIGHTS, are located in the left service cabinet near the entry door. Each rocker switch has three positions: BRT, off, and DIM. The membrane-type switches are located in the left service cabinet near the entry door, and in some aircraft, within the armrest storage compartment. Each membrane-type switch has three positions: push bright/dim/off.

During engine start, the lights should be turned off or operated at full bright. In the event of cabin depressurization, the lights will automatically illuminate full bright if the cabin altitude reaches approximately 14,000 feet.

TABLE LIGHTS

The incandescent table lights installed on all aircraft consist of two-light assemblies installed on the headliner and include an integral, directionally-adjustable lens. Depending on interior configuration, some table lights may be installed where no tables exist. Lighting control is within the two-light assembly. Some aircraft use a push on/off switch while others use a membrane-type switch. Each membrane-type switch has three positions; push bright/dim/off.

Aircraft with non-fluorescent cabin lights utilize the table lights for cabin lighting. Cabin lighting controls are located in the left service cabinet near the entry door, and in some aircraft, within the armrest storage compartment. These controls operate the same as the individual membrane-type switches except they will control the entire group of table lights. If any one table light is on, pressing the cabin lighting control switch will reset all table lights off.

The lights operate on 28 VDC supplied through the 5-amp TABLE LTS circuit breaker located on the CABIN PWR BUS (overhead panel between the crew members). In the event of cabin depressurization, the lights will automatically illuminate full bright if the cabin altitude reaches approximately 14,000 feet.

PASSENGER READING LIGHTS

Passenger reading lights are installed in the convenience panels above the seats on each side of the cabin. Each convenience panel consists of an eyeball-type air outlet, reading lights, and a switch. Each light includes an integral, directionally-adjustable lens. The lights in some aircraft are controlled through a push on/off switch while in others a membrane-type switch is used. The membrane-type switch has three positions: push bright/dim/off. Either switch is located in the convenience panel. The lights operate on 28 VDC supplied through one of the following circuit breakers (depending on aircraft configuration):

READING LTS	This 7.5-amp or 10-amp circuit breaker is located on the CABIN PWR BUS (overhead panel between the crew members).
or;	
CABIN LTS	This 5.0-amp circuit breaker is located on the copilot's circuit breaker panel.

ENTRY LIGHT

Cabin entry door lights are installed in the cabin headliner directly over the door and in the left service cabinet to illuminate the lower door steps. The lights in some aircraft are controlled through the STEP LIGHT rocker switch while in others control is by a membrane-type switch. Either control is located on the left service cabinet near the entry door. The light's circuits are wired to the battery bus through the 5-amp ENTRY LTS circuit breaker on the pilot's circuit breaker panel. Therefore, the light is operable regardless of BATTERY switch position.

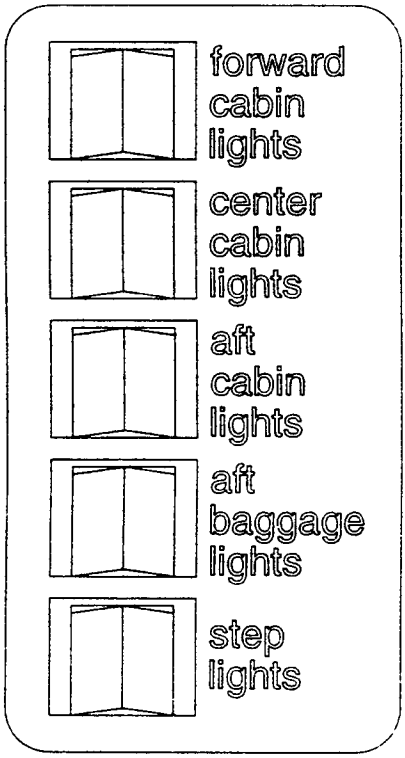

Rocker Switches

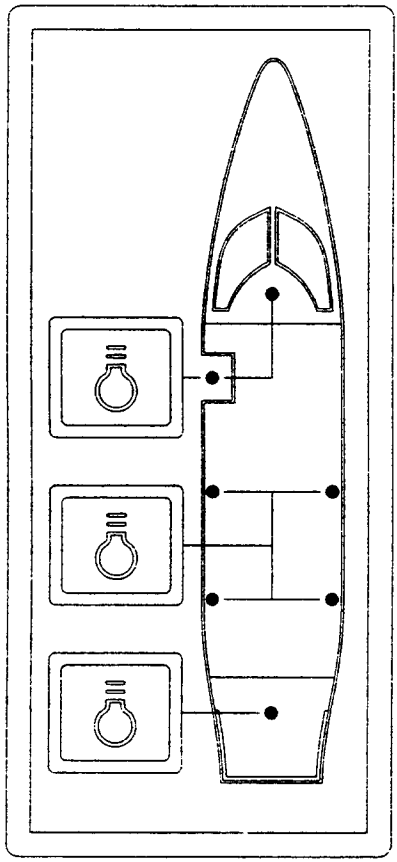

Membrane-Type Switches

Located near the entry door.

CABIN LIGHTING CONTROLS
Figure 4-7

BAGGAGE COMPARTMENT LIGHT

Overhead lights are installed in the cabin baggage compartment to provide illumination of the compartment. The lights in some aircraft are controlled through the AFT BAGGAGE LIGHTS rocker switch while in others control is by a membrane-type switch. Either control is located on the left service cabinet near the entry door. The lights' circuits are wired to the battery bus through the 5-amp ENTRY LTS circuit breaker on the pilot's circuit breaker panel. Therefore, the lights are operable regardless of BATTERY switch position.

NO SMOKING AND FASTEN SEAT BELT SIGNS

No smoking and fasten seat belt signs are installed in the cabin headliner immediately aft of the crew compartment and in the aft cabin. When illuminated, the sign displays symbolic representations for no smoking and fasten seat belts. Illumination of the sign is controlled through the NO SMOKING FASTEN SEAT BELT-OFF-FASTEN SEAT BELT switch on the center switch panel. When the switch is set to NO SMOKING FASTEN SEAT BELT, both symbols will illuminate. When the switch is set to FASTEN SEAT BELT, only the fasten seat belt symbol will illuminate. Whenever the NO SMOKING FASTEN SEAT BELT sign (either symbol) illuminates, a tone is generated and sounds through the cabin speakers. Electrical power to illuminate the signs is 28 VDC supplied through one of the following circuit breakers (depending on aircraft configuration):

READING LTS	This 7.5-amp or 10-amp circuit breaker is located on the CABIN PWR BUS (overhead panel between the crew members).
or;	
CABIN LTS	This 5.0-amp circuit breaker is located on the copilot's circuit breaker panel.

EMERGENCY LIGHTING SYSTEM (OPTIONAL) — EARLY DESIGN

The emergency lighting system provides cabin and exit lighting in the event of an electrical system failure. The system consists of two emergency batteries, an upper cabin entry door light, an emergency egress light, the cabin overhead fluorescent lights, two system switches, and associated aircraft wiring. The batteries are charged through the 5-amp EMER LTS circuit breaker on the copilot's circuit breaker panel.

EMER LIGHT SWITCH

The EMER LIGHT switch, installed on a panel in the pedestal, provides the test function for the system and for automatic illumination of the emergency lights in the event of an interruption of normal electrical power. The switch has three positions: TEST, ARM, and DISARM. Setting the switch to TEST simulates a failure of the normal electrical power system and illuminates the upper cabin entry door light, the emergency egress light, and the cabin overhead fluorescent lights. Setting the switch to ARM will arm the system to illuminate the emergency lights in the event of a failure of the normal electrical system. Setting the switch to DISARM isolates the emergency lights from the emergency batteries. The switch should be set to ARM prior to takeoff. If the switch is in the DISARM position and at least one BATTERY switch is On, the amber light adjacent to the switch will illuminate to remind the pilot that the switch should be set to ARM. The switch should be set to DISARM prior to setting the BATTERY switches OFF.

EMERGENCY LTS-NORM SWITCH

The EMERGENCY LTS-NORM switch on the left service cabinet near the entry door provides for manual illumination of the emergency lights. When the switch is set to EMERGENCY LTS, the upper cabin entry door light, the emergency egress door light, and the forward and aft cabin overhead fluorescent lights will illuminate. For normal operation, the switch should be set to NORM. Setting the switch to NORM does not hinder automatic illumination of the emergency lights in the event of an electrical system failure.

EMERGENCY LIGHTING SYSTEM (OPTIONAL) — LATE DESIGN

The emergency lighting system provides cabin and exit lighting in the event of normal electrical system failure. The system consists of two emergency batteries, an upper cabin entry door light, an emergency wing egress light, an EMERGENCY EXIT LIGHTS control panel, and associated wiring. The forward exit door light, left and right, fore and aft passenger reading lights, the aisle proximity lights and wing egress light are used to provide lighting for emergency egress. The batteries are charged through the 10-amp EMER LTS circuit breaker located on the copilot's circuit breaker panel. If armed, the system will automatically activate whenever normal electrical power is lost. Therefore, the system will automatically activate during the EMER BUS mode.

EMERGENCY EXIT LIGHTS CONTROL PANEL

The EMERGENCY EXIT LIGHTS control panel, in the cockpit pedestal, provides control, testing, and indicating functions for the emergency exit lighting system. The panel includes: one control switch (ON-ARMED-OFF/RESET), one test switch, (TEST BAT 1-NORM-TEST BAT 2), one white ON annunciator, and one amber NOT ARMED annunciator.

CONTROL SWITCH

Functions of the control switch are shown in the following table:

Switch Position	System Response
OFF/RESET	The relays in both battery units will reset to off and all emergency exit lighting will go out. Pressing the push button switch in the cabin entry door will activate the system while held. Upon release, the system will reset to off.
ARMED	Arms the system to automatically activate should normal electrical power be lost. Selecting ARMED prior to powering up the aircraft will cause the system to activate immediately. Pressing the push button switch in the cabin door will manually activate the system.
ON	To manually activate the system, hold switch momentarily to ON and release. The switch will spring back to the ARMED position and the system will remain activated.

TEST SWITCH

The test switch is a three-position switch spring loaded to the NORM position. The test switch is used to verify that each battery unit is capable of powering all the emergency exit lighting by itself.

To test system:

1. Aircraft BATTERY Switches — On.
2. EMERGENCY EXIT LIGHTS Switch — ARMED.
3. TEST Switch — BAT 1 and hold. White ON annunciator illuminates. Fore and aft reading lights, aisle proximity lights, and door and wing egress lights illuminate.
4. TEST Switch — BAT 2 and hold. White ON annunciator illuminates. Fore and aft reading lights, aisle proximity lights, and door and wing egress lights illuminate.
5. TEST Switch — Release to NORM. Emergency exit lighting resets to off and ON annunciator extinguishes.

ANNUNCIATORS

Description of the ON and NOT ARMED lights is shown in the following table:

Annunciation	MEANS
ON (WHITE)	The emergency lights are illuminated either manually or automatically. Also annunciates during test.
NOT ARMED (AMBER)	The aircraft is powered up and the system is not armed.

MASTER WARNING AND ANNUNCIATOR PANEL LIGHTS

The master warning lights on the pilot's and copilot's instrument panels and annunciator panel lights on the glareshield give a visual indication of various systems operating conditions. The annunciator panel lights are green, amber, or red. The master warning lights are coupled to the red warning lights on the annunciator panel and the red warning light on the electric power monitor. If a red warning light on the annunciator panel or electric power monitor comes on, the MSTR WARN lights will light and flash. Depressing the MSTR WARN light lens will extinguish the MSTR WARN light, but the specific red warning light which triggered the MSTR WARN will remain lighted as long as the abnormal condition exists.